LESSMANN®

THE GERMAN BRUSH COMPANY

Catalogue 18

Edition

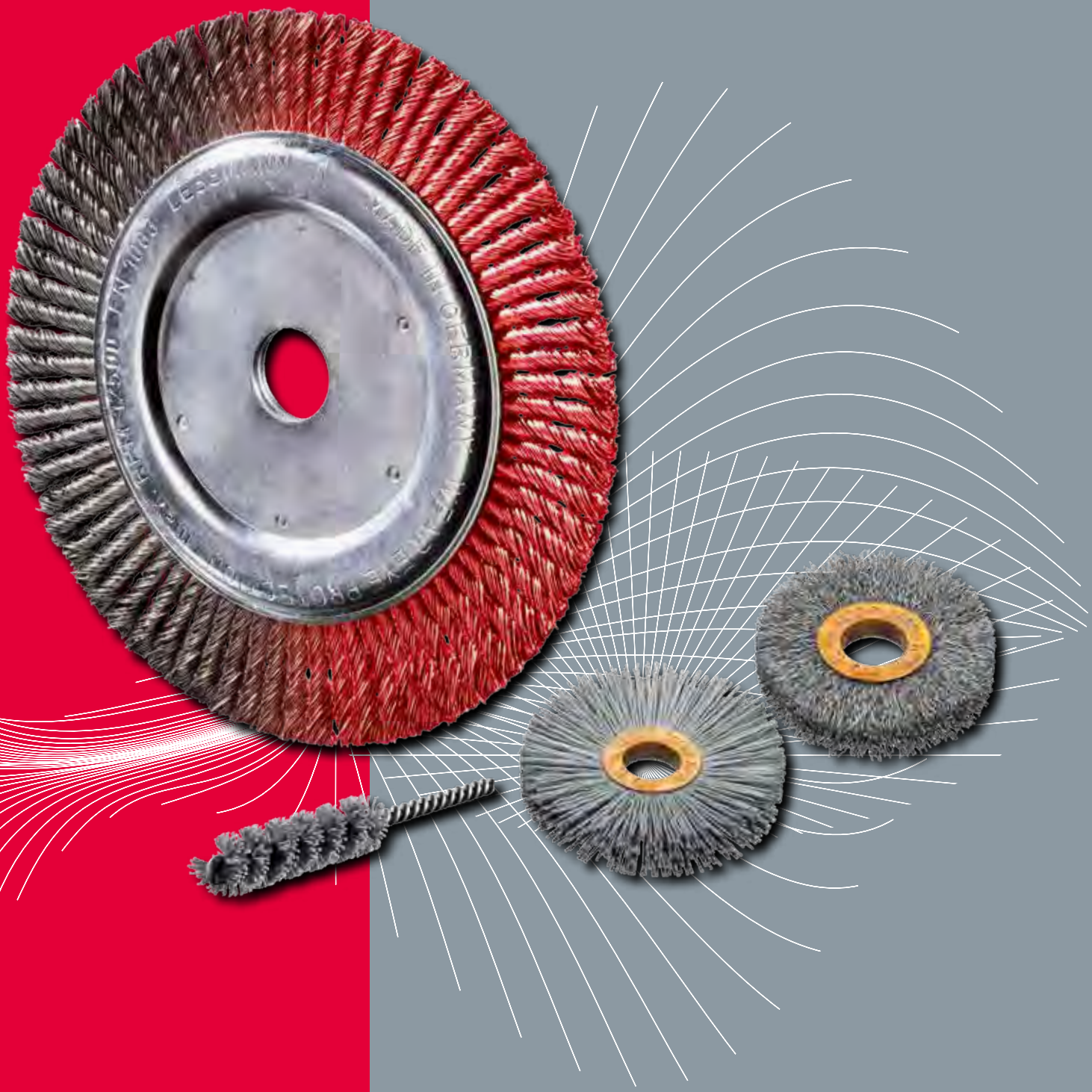

QUALITY MADE IN GERMANY

LESSMANN®
THE GERMAN BRUSH COMPANY

4 - 7 Information

8 - 13 Technology, Material and Safety

14 - 39 **Wheel Brushes**

Knot Wheel Brushes, Joint Cleaning Brushes, Pipeline Brushes, Single Segment Brushes, Wheel Brushes, Special Wheel brushes, Accessories

40 - 49 **Deburring Brushes**

Deburring Brushes, Roller Brushes, Deburring End Brushes

50 - 61 **Cup and Bevel Brushes**

Cup Brushes, Bevel Brushes, Brushes for grass trimmers

62 - 77 **Shank Brushes**

Shank Wheel Brushes, Cup Brushes with Shank, End Brushes, Miniature Brushes

78 - 95 **Hand Brushes and Brooms**

Standard Hand Brushes, Spark Plug Brushes, Fine Scratch Brushes, Special Models, Brooms and Scrubs, Dusters, Weed Brushes and Brooms

96 - 117 **Interior Brushes**

Mikro Interior Brushes, Cylinder Brushes, Sleeve Brushes, Stove Pipe Brushes, Boiler Brushes, Fitting Brushes, Brushes and Scratchers

118 - 127 **DIY Brushes and Sales Promotion**

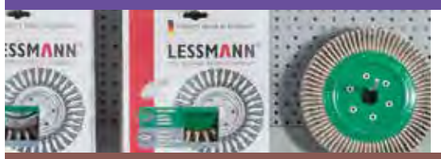

Do It Yoursel Brushes, Packaging and Presentation, Sales Promotion

128 - 143 **Industrial Brushes**

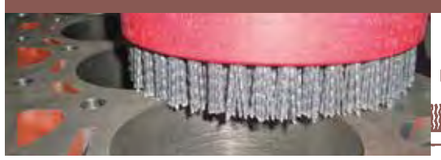

Brushes with carbon fibre, Disc Brushes, Lath Brushes, Wheel and Roller Brushes, Strip Brushes

Dear customers,
dear interested parties,

for 70 years, the name LESSMANN stands for a medium-size family business with high-quality surface finishing tools "Made in Germany". We thank our partners and valued customers for your support! Through seven decades of experience we are able to provide you with the highest quality and innovative products. The latest knowledge and ideas are combined in-house and implemented to first-class products for our customers worldwide.

Retailers receive a wide assortment of **standard goods** for fair market value. **Industrial customers** may expect **custom-made products** which agree upon the special demands in their production processes. Permanent product improvements, working with innovative raw materials and being willed to break through technical limits this again and again bring us new possibilities to create the best solutions for you.
New additions to the **catalog range** include brushes with carbon fibre (see page 130), high performance filament brushes (see page 132) and knot bevel brushes with shank (see page 68). You can also find the newly designed cut cases for optimal presentation of the brushes on the shelf (see page 123).

We are pleased to serve our US customers through our subsidiary in Houston, Texas founded in June 2016. 70 years of competence and know-how go from Oettingen/Bavaria to the United States and bring many solutions for individual applications.
Last year we also invested at our Oettingen site and expanded capacities, we schedule delivery dates even more precisely and produce and operate even more efficiently.
Steady service, fast response, selected suppliers and a constantly growing know-how of our qualified and committed employees – with these values we also would like to be in future your professional partner for technical brushes as "THE GERMAN BRUSH COMPANY".

For the achievements and decisions we stand with our name.

Jürgen Lessmann

Dieter Lessmann

Quality, Fairness, Reliability

LESSMANN®

To do the right things to the right time: the success of our company nowadays is based on contributions and entrepreneurial decisions in the past. This day, we, as a family enterprise in the third generation, are facing new customer demands and market statues, react flexible and work efficient, to gear our company up for the future!

Quality, Fairness and Reliability are the most important values in the relation to our customers and partners, since Johann LESSMANN and its children Edgar and Traudel founded a small brush factory in Oettingen.

Strict quality management, uncompromising customer orientation and decades of experience make up the foundation of our success. One of the most important strengths are our 220 qualified and motivated employees, who are willing to get into new challenges, react flexible and to bring in their knowledge und competence. That's how we work together to have a mutual success.

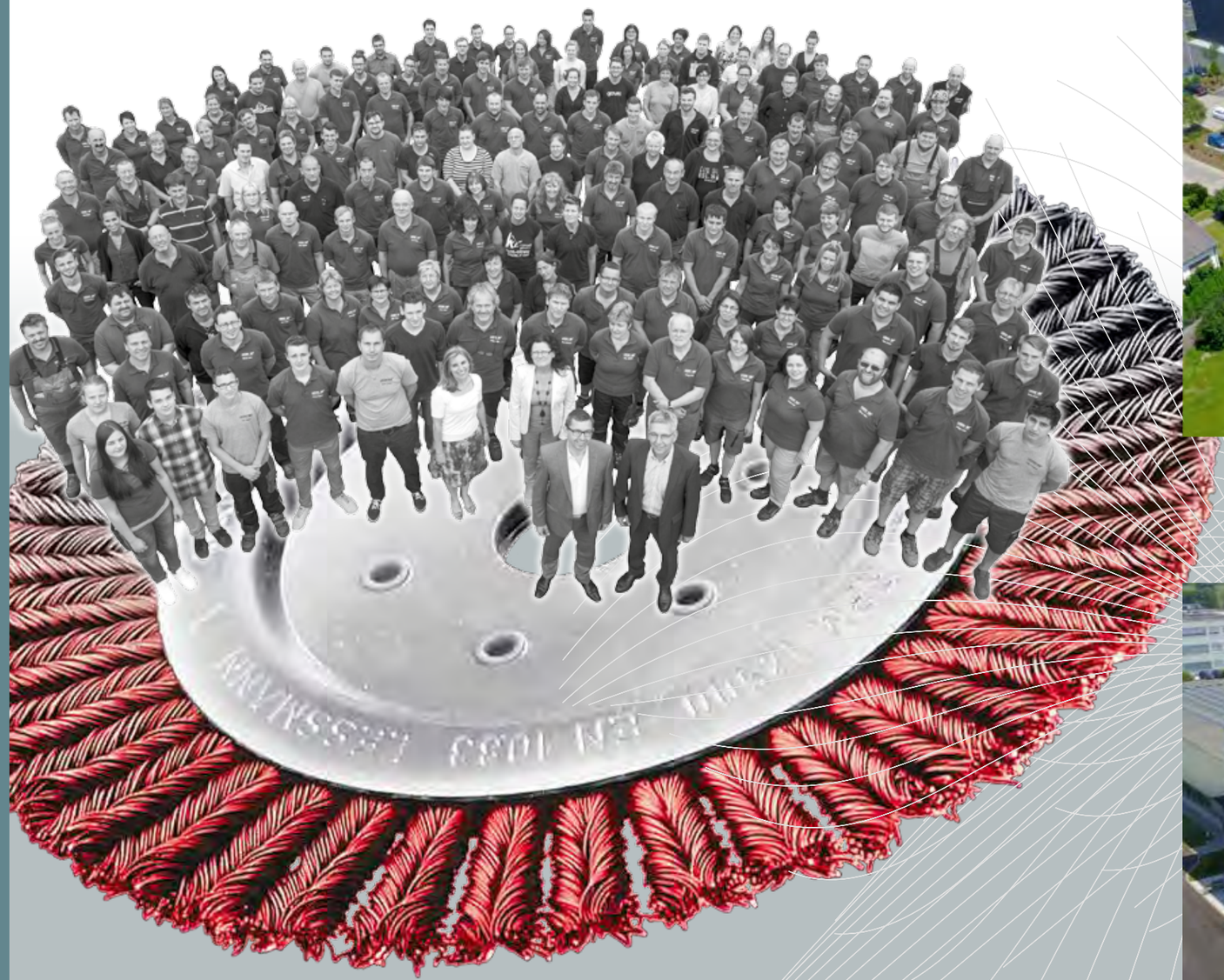

Future-oriented investment

An important investment into the future is the construction of our new 4,200 sqm production hall in 2013: this step is a visible sign of our stable growth. We set another milestone in 2016 by the enlargement of our high rack storage area. These steps are a visible sign of our stable growth.

Besides the new building shows our intention to assure our position as leading technological and qualitative company and to strengthen it by opening new markets! Furthermore we have more space and capacities for producing more industrial special solutions – of course in our usual best quality and accuracy!

THE GERMAN BRUSH COMPANY

Made in Germany

Quality made in Germany. For LESSMANN that does not only mean, that all our products are manufactured in Bavaria, but also the huge part of all raw materials as filament, wood, metal or plastics are purchased from renowned suppliers in Germany.

We manufacture almost all products in a broad standard program on our own. That's why already the quality of the raw materials has a significant role. Intensive test of the materials and inspections during production, build up two important values of the reliable LESSMANN-quality.

The headquarters in Germany requesting us to be the pioneer when using modern technology and automation. Thus our customers can receive the best quality at competitive prices.

Fit for the Globe

First-class quality products, expertise and a high flexibility – our innovative technical brushes are "Fit for the Globe".

Depending on the country we work with our own employees, regional importers or authorised retailers. Our export department has the accurate know-how, to consult and satisfy the demand of our customers globally.

In 2016 we launched a foreign branch in the USA located in Houston, Texas. The „LESSMANN Inc." guarantees optimal service and logistics and our approved first-class products on the American market.

Perfect Service for Perfect Presentation

The brand LESSMANN signifies quality and gives clearly structured information.

Please have a look at our home page in the internet!
On www.lessmann.com you will find our latest catalogue as well as leaflets to download. Further technical advice as well as operating instructions are available.

Self-service Tool Bar Displays
Take advantage of our experience and use this idea that will lead to successful and increased sales.

Individual Solutions for special applications

Often technical brushes for very special applications are requested. Devarnishing surfaces or rounding burrs. Each application is different and a standard tool could not be used in each case.

Every day we develop new brushes for industrial demands. In the majority of the cases, the aim of the operator is to increase productivity. Our experienced consultants will help you to make the right choice and to find the appropriate design of the brushes for your individual needs.

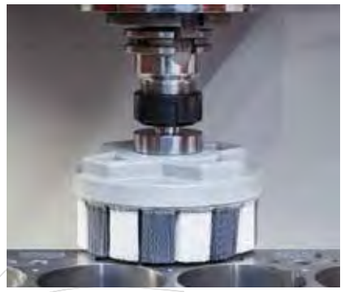

"Simply the Best" by testing

Our own production of nearly all components of our standard programme and our own development of special articles enables us to have an excellent knowledge in both manufacturing quality and safety testing.

Creating Innovation,
Exceeding Safety Standards,
Keeping Top Quality

With this motivation we make complex development and product tests as an essential part of our work.

Material Tests
These are the first steps of our quality management: All deliveries of raw material are tested according to and above specification details. All wires are tested for their tensile strength and for their reverse bending strength by a fatigue measuring process.
Beside the quality of the material it is important that its attributes are as suitable as possible for their intended use.

Imbalance Test
An imbalance of machine driven brushes is not pleasant and is dangerous for the health of persons working at the machine.
Although it is not necessary under the DIN or the EN Norms, we produce our brushes according to our own standards for minimum imbalance. By doing so our customers take advantage of smooth running fatigue reducing brushes. Our employees in production ensure that these high quality aspects are maintained.

Safety Tests
According to European safety norms all brushes have to with-stand 1.5 times of the mentioned maximum RPM. Naturally when developing a brush, we test every brush type for this safety aspect. Only if all tests are satisfactory, can the article be produced. During production many samples are taken of the brushes in order to check the required safety speed. Should a model or a raw material be changed we begin the tests again. For this very reason every customer can rely on a high quality and safe tool.

Lifetime and Power
For the measurement of the lifetime and power of technical brushes there are neither norms nor standard procedures. After long developing processes and many tests we have found testing methods that simulate testing in real working conditions. On self built machines we are able to test the abrasion and thus the lifetime and power of machine driven brushes.
Beside the quality aspect these tests are helpful in optimising materials used, as well as component parts and the construction of brushes. Even if in comparison tests with competitor brushes such testing has shown and proved the high quality of our products:

We keep on testing to guarantee customer satisfaction.

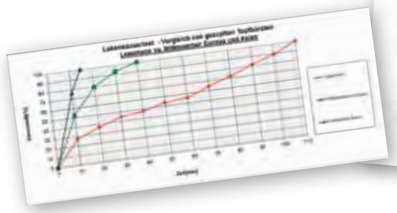

Quality is our feature!

Accredited with DIN EN ISO 9001

Recommendations for Safe Brush Use

LESSMANN Quality is Safe
We guarantee the best quality and long lifetime for our products.
Our brushes are manufactured according to the existing standard EN 1083-2 and ANSI 165.1. All the relevant machine driven brushes are checked for occupational safety using a centrifugal force test.

Safety Information
All machine driven brushes require as with other rotary tools, that the required safety precautions are kept:

Safety for Your Body
All operators and other personnel in areas where rotary brushes are being used must wear safety goggles or face shields and protective clothing.

For your own safety:
Wear personal protective equipment

Brush Check
The brushes should be checked for damage before using.

A correct mounting is imperative.

Peripheral Speed
The max. RPM indicated in the catalogue are safety figures by which the brushes can be used without danger. Please do not exceed these figures under any circumstances! In most cases a lower RPM is sufficient to gain an optimal result.

Correct Pressure
The schedule shows the necessary motor drive power for different brush diameters. The brushes need only a light pressure while brushing because only the wire points are effective (please look at the schedule). A higher pressure does not improve the brushing effect. In fact the brush lifetime is reduced and greater power is needed. The indicated curves inform you about the expected power. The power ratings refer to a brush with 30 mm width.

Working with Shank Brushes
When working with shank brushes please note that the shank has to be inserted fully into the tool.
This is especially necessary when working with high RPM, for example on straight grinders and pneumatic tools.

Mechanical Application
Only use the brush with the indicated maximal peripheral speed (RPM max.). The max. RPM only is allowed when the brush is clamped min. for 10 mm into the tool. When the brush is inserted into the suitable work piece, higher RPMs are possible. Only use the brush right rotating.

Correct

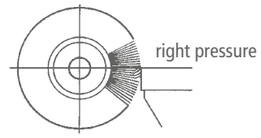

Incorrect

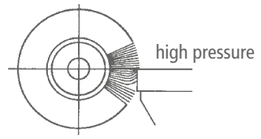

Machine usage:
These symbols in the chapters show on which machines the brushes usually are used.

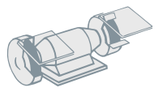

Stationary equipment

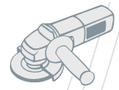

Angle grinder

Straight grinder

Drilling machine

Grass trimmer

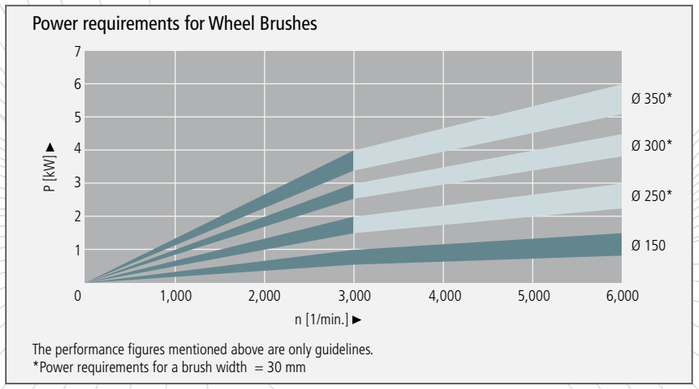

The performance figures mentioned above are only guidelines.
*Power requirements for a brush width = 30 mm

minimum bore size for wheel brushes according to DIN EN 1083

Diameter of the brush in mm	Minimum diameter of bore in mm
50	4.6
75	6.5
100	10
150	13
200	16
250	20
300	20
350	32

Recommended use of brushes on angle grinders – the right combination

Common idle speed of angle grinders (WS)	Brush diameter	60	65	75	80	90	100	115	125	150	178	200
	Knot Wheel Brush						WS 1	WS 1	WS 2	WS 3	WS 4	WS 5
Ø 115 11,000 RPM = WS 1	Cup Brush, Crimped Wire	WS 2		WS 2	WS 3		WS 3		WS 5	WS 5		
Ø 125 11,000 RPM = WS 2	Knot Cup Brush without Bridle		WS 1	WS 2	WS 2	WS 2	WS 3/4		WS 5			
Ø 150 9,000 RPM = WS 3	Knot Cup Brush with Bridle				WS 3/4		WS 3/4		WS 5			
Ø 180 8,500 RPM = WS 4	Knot Bevel Brush						WS 1					
Ø 230 6,500 RPM = WS 5	Knot Bevel Brush						WS 1	WS 1				

Warning: Before each operation please compare the idle speed of the angle grinder with the max. peripheral speed of the brush!

Producing Quality – brushing the correct way

Optimise Brush Results
The brush diameter and filling length are most important for the perfect brushing result. It is therefore very easy to eliminate almost all bad brushing results:

Brushing effect too weak:
- Increase the peripheral speed by increasing the brush diameter or the operating speed, but never exceed the maximum RPM rating.
- Use a brush with shorter trim length.
- Use a brush with larger wire diameter.

Brushing effect too powerful:
- Reduce the peripheral speed by reducing the brush diameter or the operating speed.
- Use a brush with longer trim length.
- Use a brush with smaller wire diameter.

Brush transfers burr:
- Use a brush with shorter trim length.
- Examine brush and work piece position.
- Use a brush with wider face.
- Use a brush with thicker wire diameter.

Information for brushing on stainless steel materials you find at **www.lessmann.com**

Note: you are welcome to contact our technical contact persons.

Recommended Peripheral Speed for Brushing Application

	Peripheral Speed in m/s							
Application	15	20	25	30	35	40	45	50
With Filaments								
Removing Burrs				25 - 35				
Cleaning Welds						35 - 45		
Removing Scale						35 - 45		
Polishing					30 - 40			
Working on Plastic	15 - 20							
With Abrasive Filaments								
Dry conditions	16 - 18							
Wet conditions			25 - 30					

Conversion mm in Inches and I.S.W.G.

Brush diameter	
Millimeter	Inches
25	1"
50	2"
75	3"
100	4"
125	5"
150	6"
180	7"
200	8"
250	10"
300	12"
350	14"

Wire diameter		
Millimeter	Inches	I.S.W.G
0.08	0.0031	44
0.10	0.0039	42
0.12	0.0047	40
0.15	0.0059	38
0.20	0.0079	36
0.25	0.0098	33
0.30	0.0118	31
0.35	0.0138	29
0.40	0.0157	27
0.50	0.0197	25
0.80	0.0315	21

Peripheral Speed v in m/sec. (please follow the max. rotary speed of the brush!)

n [1/min.]	Brush diameter d in mm/inches							
(RPM)	50 2"	80 3"	100 4"	125 5"	150 6"	200 8"	250 10"	300 12"
1,000		4.2	5.2	6.5	7.9	10.5	13.1	15.7
1,500	3.9	6.3	7.9	9.8	11.8	15.7	19.6	23.6
2,000	5.2	8.4	10.5	13.1	15.7	20.9	26.2	31.4
2,500	6.5	10.5	13.1	16.4	19.6	26.2	32.7	39.3
3,000	7.9	12.6	15.7	19.6	23.6	31.4	39.3	47.1
3,500	9.2	14.7	18.3	22.9	27.5	36.7	45.8	55.0
4,000	10.5	16.8	20.9	26.2	31.4	41.9	52.4	62.8
5,000	13.1	20.9	26.2	32.7	39.3	52.4	65.4	78.5
6,000	15.7	25.1	31.4	39.3	47.1	62.8	78.5	
8,000	20.9	33.5	41.9	52.4	62.8	83.8		
10,000	26.2	41.9	52.4	65.4	78.5			
12,500	32.7	52.4	65.4	81.8				
15,000	39.3	62.8	78.5					
20,000	52.4	83.8						
25,000	65.4							

$$\text{Peripheral Speed} \quad v = \frac{\text{Brush diameter (d)} \times \pi \times \text{Peripheral Speed (n)}}{1{,}000 \times 60}$$

For **working in wet condition** we recommend **PA 6.12** as base. Please state on your order! Since the upcoming heat on wet applications is conducted, the peripheral speed can be set much higher than on dry applications.

Brush filling materials and the characteristics

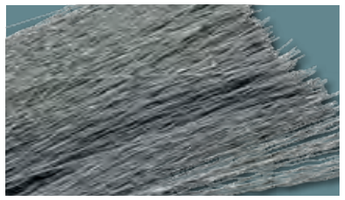

STA Steel Wire straight / crimped
is developed in co-operation with wire producers, so that it meets our special requirements. This wire is alloyed with manganese in order to increase its toughness. Result is higher tensile strength and longer lifetime of LESSMANN-Brushes.

STH Steel Wire High Tensile straight / crimped
is most often used in Knotted Brushes, Deburring Brushes and Pipeline Brushes. Furthermore we offer this high tensile wire in our complete assortment. Above all it features through its tensile strength and high fatigue rates, what results in lifetime even for extreme brushing applications.

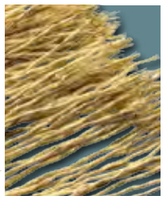

STM Brass Coated Steel Wire
For long lifetime plus high tensile strength and cutting performance. Best results in brushing and deburring applications.

STL Cord Wire
Brass coated steel wire corded. Longest lifetime for heavy duty brush applications e. g. deburring.

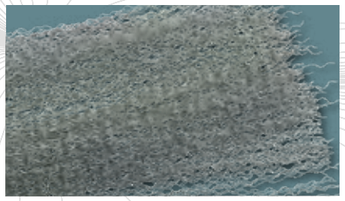

ROF / RO4 / ROL / RO8 Stainless Steel Wire
ROF must be used when working on stainless steel. Material number (WNr.) **1.4301 (AISI 304)**. This wire is resistant against corrosion and certain acids and bleaches.
RO4 Premium-quality stainless steel wire. WNr. **1.4401 (AISI 316)**
RO8 High heat resistant stainless steel wire. WNr. **1.4860**.
ROL Stainless Steel Wire with cord construction WNr. **1.4310**

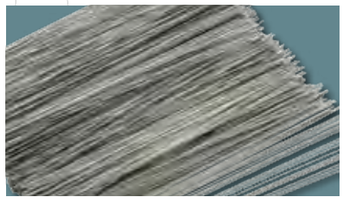

ROH Stainless Steel Wire High Tensile
This wire is characterized by a high tensile strength 2100 – 2500 and a long lifetime even in extreme applications. WNr. **1.4310 (AISI 301)**.

Further information on brushing on stainless steel materials you find at **www.lessmann.com**

MES Brass Wire (CuZn)
is softer than steel wire. Among other applications brass wire is suitable for working with mild bleaches. It's mainly used for processing of nonferrous metals.

straight / crimped / knotted: Metal wires for brushes can be processed in brushes straight, crimped or knotted. Wire knots are always made with straight wires. Compared to a straight wire with the same diameter the wire knots are much stronger than the single wire. Crimped wires brace each other and therefore achieve a better stability in the brushes.

Brush filling materials and the characteristics

BRO Bronze Wire (CuSn)
is used for surface processing of wood and metal. It's also used when low-sparking brushes are needed.

NSI Nickel Silver (CuNi)
is used for polishing work pieces e. g. parts of nickel silver or brass, as it is softer than steel wire.

PP, PA, PE Synthetic Filaments
are resistant to abrasion and flexible. Despite minor resistance against heat these filaments are perfect for cleaning, grinding or surface pro-
cessing of metal, plastic or wood.
Available are:
- Polypropylen (PP)
- Polyamid (PA) - PA 6, PA 6.6, PA 6.12
- Polyethylen (PE)

FIB Fibre
consists of heat resistant plant fibre, is slightly abrasive and therefore can be used for smooth grinding, above all for working on wooden surfaces. Moreover fibre is used for general cleaning and polishing work.

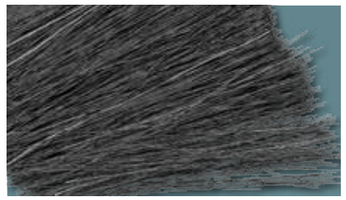

ROS Horse Hair
is an animal hair, which above all is deployed in terms of light cleaning and dusting work. Horse hair is resistant against diluted acids and bleaches. It's not chargeable for static electricity.

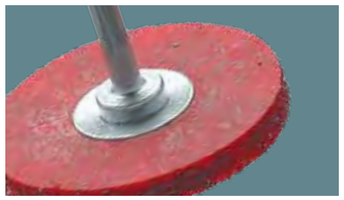

Encapsulated Brushes
Encapsulated brushes are ideal for an aggressive work on working pieces and for a very exact working in edges and angles.
By embedding steel wire, stainless steel wire, brass coated wire or brass wire in tough plastic, the filling width always remains the same and early break of the wires can be prevented. It's the perfect tool for long lasting and safe working. The advantages when working with encapsulated brushes are longer lifetime and harder brush effect.
Furthermore the risk of injury declines when using encapsulated brushes.
However, it might be possible that the brush will leave marks on the work piece.

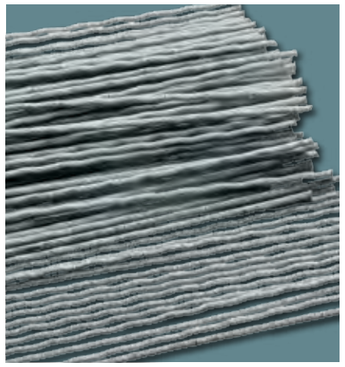

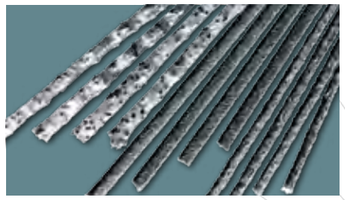

3 grits in silicon carbid

Abrasive Filaments
consist of polyamide bristles containing abrasive grits. This modern material is ideal for deburring work, fine surface finishing of plastic and metal parts as well as grinding, cleaning, polishing, and structuring of surfaces. With their flexible surface, brushes with abrasive filament align to the different shape of working pieces. Abrasive bristles also have grinding effects on the side, which makes them even more flexible to application possibilities. You can choose between grit (from K60 to K1000) composed of aluminium oxide (AO) and silicon carbide (SIC). Also diamond filament is available.

Normally 2 polyamide-types are used:
Polyamide PA 6:
- good bend recovery
- good abrasion resistance
- absorption of water to max. 10%

Polyamide PA 6.12 (ideal when working in wet surrounding):
- flexible and excellent bend recovery
- high abrasion resistance
- absorption of water to max. 3%

You can differ the bristles between round or flat bristles. Usually round bristles are used, because they are more flexible than flat bristles and very good for processing work pieces with strong shapes. Round bristles with a smaller diameter, less than 150 mm, are very efficient if you are not able to use flat material.
However, flat bristles possess a high abrasive grit, represent a long durability and a high removal rate by a larger contact surface.

Grits to choose from:

Abrasive filaments SIC (filament K60 to K1000):
- intensive results when deburring
- for surficial improvement/-processing
- mainly for process stainless steel and aluminium limited

Common measurements: K 80/1,1, K 80/1,2, K 80/1,4, K 120/0,6, K 120/1,1, K 180/0,9, K 180/1,0, K 320/0,60, K 500/0,5

Abrasive filaments AO (filament K60 to K1000):
- less sharp-edged compared to SIC
- to the finish of soft metal
- to polishing and smoothing
- to process aluminium when smoothing or polishing

Common measurements: K 80/1,2, K 120/1,1, K 180/0,9, K 180/1,0, K 240/0,75, K 240/0,90, K 320/0,60, K 500/0,25, K 500/0,50, K 600/0,3 – others on request.

Diamonds filaments(filament K60 to K1000):
- for aggressive applications
- used for materials with high material strength
- self-renewing through independent sharpening

By ordering our standard grit, also with small quantities you receive short delivery times!
The chemical components of nylon please find at **www.lessmann.com**

Physical Characteristics

	STA	STH	ROF	ROH	RO4	RO8	STM / STL	MES
WNr.			1.4301	1.4310	1.4401	1.4860		CuZn37
AISI			304	301	316			
Tensile Strength in N/mm²*	1,800 - 2,100	2,300 - 2,500	1,800 - 2,100	2,100 - 2,500	1,600 - 1,800	1,600 - 1,800	2,300 - 2.600	900 - 1,200
Specific Gravity in g/cm³	7,85	7,85	7,85	7,85	7,85	7,90	7,85	8,50
Temperature Consistancy in °C	+ 300 °C	+ 300 °C	+ 450 °C	+ 450 °C	+ 500 °C	+ 600 °C	+ 300 °C	+ 180 °C

*The specified Tensile Strength is applicable for a wire strength 0.3 - 0.4 mm

LESSMANN®
THE GERMAN BRUSH COMPANY

WHEEL BRUSHES

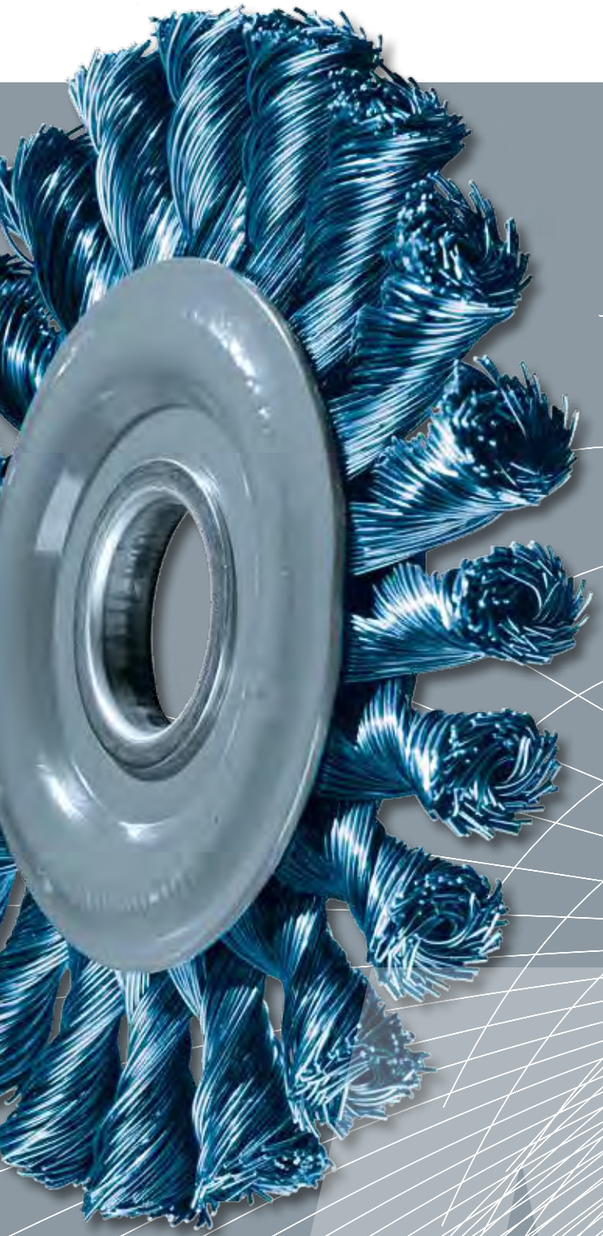

Knot Wheel Brushes

Knot Wheel Brushes
Knot wheel brushes for grinders, angle grinders and stationary machines used in the preparation and reworking of bolt fillet and butt welds. They remove scale, rust, paint, slag, rubber residue and can be used for deburring.

Knot Wheel Brushes with multiple Rows
Ready mounted brushes with multiple rows have a dense filling compared to single segment brushes, which are assembled together. In your order please state the width of the brush, bore size and type and thickness of wire.

The listed knot wheel brushes are for the use in stationary machines.

Stainless Steel Brushes
LESSMANN-brushes with stainless steel have green side plates. We use wire with material number 1.4310. Material number 1.4401 can be used on request.
Information on working on stainless steel you find at www.lessmann.com

Chunky packaging
Many articles you receive as standard in handy covering boxes with 10 pcs.

All knots on our standard twisted wire wheel brushes are left hand twisted in order to minimize the undoing of the knots should the brush be used incorrectly.
On request we can supply right hand twist brushes.

We recommend to turn the brush during use in order to maintain sharpened wire ends.

On request other bores and wire diameter are available.

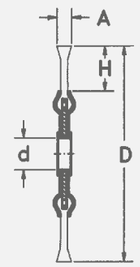

ZF = Knot type
Z = number of knots, R = number of rows

Item Nos. in bold are available ex stock.
Consider our minimum order value for *italic printed* article numbers (see page 148).

STM = brass coated steel, straight
STH = steel wire, high tensile, straight
ROH = stainless steel wire, high tensile, straight

Knot types ZF

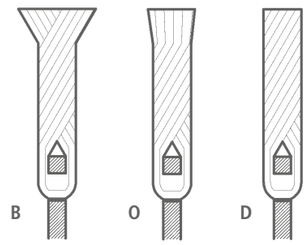

B: Rose Bud
O: Open Knot (wire ends are cut)
D: Fully knotted (wire ends are cut completely)

EAN **Knot Wheel Brushes, Steel Wire, Brass Wire**

D mm | *inch*	A mm | *inch*	d mm | *inch*	H	Z	ZF	R	RPM max.	Pack.	**STH 0.35** | *0.014"* Art.-No.	**STH 0.50** | *0.020"* Art.-No.	**STH 0.80** | *0.031"* Art.-No.	**STM 0,50** | *0.020"* Art.-No.	*left-right knotted* **STH 0.50** | *0.020"* Art.-No.
75 | *3*	10 | *3/8*	13 | *1/2*	15	18	B	1	25,000	1	**470.111***	**470.211***			
100 | *4*	12 | *1/2*	M 14 x 2,0	22	18	B	1	12,500	1	**471.117***	**471.217***			
115 | *4 1/2*	14 | *1/2*	22.2 | *7/8*	24	20	B	1	12,500	1	**472.111***	**472.211***		**472.211.SM***	**472.211.WZ***
115 | *4 1/2*	14 | *1/2*	M 14 x 2,0	24	20	B	1	12,500	1	**472.117***	**472.217***			
125 | *5*	14 | *1/2*	22.2 | *7/8*	29	20	B	1	12,500	1	**473.111***	**473.211***		**473.211.SM***	**473.211.WZ***
125 | *5*	14 | *1/2*	M 14 x 2,0	29	20	B	1	12,500	1	**473.117***	**473.217***			**473.217.WZ***
125 | *5*	14 | *1/2*	22.2 | *7/8*	29	24	B	1	12,500	1		**473.211.24**			
150 | *6*	14 | *1/2*	22.2 | *7/8*	32	26	B	1	12,500	1	**474.111***	**474.211***	*474.311*		
150 | *6*	14 | *1/2*	M 14 x 2,0	32	26	B	1	12,500	1	*474.117**	**474.217***	*474.317*		
178 | *7*	14 | *1/2*	22.2 | *7/8*	38	32	B	1	12,500	1	**475.111***	**475.211***	**475.311**		
178 | *7*	14 | *1/2*	M 14 x 2,0	38	32	B	1	12,500	1	*475.117**	**475.217***	*475.317*		
200 | *8*	14 | *1/2*	22.2 | *7/8*	41	36	B	1	9,000	1	**476.111**	**476.211**	**476.311**		
200 | *8*	14 | *1/2*	50.8 | *2*	41	36	B	1	9,000	1		*476.210.51*	available on demand		
230 | *9 1/16*	14 | *1/2*	22.2 | *7/8*	56	40	B	1	9,000	1		*475.211*			
250 | *10*	15 | *5/8*	50.8 | *2***	42	52	O	1	5,000	1		**477.210.75**	*477.310.75*		
300 | *12*	15 | *5/8*	50.8 | *2***	56	58	O	1	5,000	1		*478.210.75*	*478.310.75*		

EAN **Knot Wheel Brushes, Stainless Steel Wire**

D mm | *inch*	A mm | *inch*	d mm | *inch*	H	Z	ZF	R	RPM max.	Pack.	**ROH 0.35** | *0.014"* Art.-No.	**ROH 0.50** | *0.020"* Art.-No.	*left-right knotted* **ROH 0.50** | *0.020"* Art.-No.
100 | *4*	12 | *1/2*	M 14 x 2,0	22	18	B	1	12,500	1		**471.817***	
115 | *4 1/2*	14 | *1/2*	22.2 | *7/8*	24	20	B	1	12,500	1	**472.711***	**472.811***	**472.811.WZ***
115 | *4 1/2*	14 | *1/2*	M 14 x 2,0	24	20	B	1	12,500	1	**472.717***	**472.817***	
125 | *5*	14 | *1/2*	22.2 | *7/8*	29	20	B	1	12,500	1	**473.711***	**473.811***	**473.811.WZ***
125 | *5*	14 | *1/2*	M 14 x 2,0	29	20	B	1	12,500	1		**473.817***	
150 | *6*	14 | *1/2*	22.2 | *7/8*	32	26	B	1	12,500	1		**474.811***	
150 | *6*	14 | *1/2*	M 14 x 2,0	32	26	B	1	12,500	1		**474.817**	
178 | *7*	14 | *1/2*	22.2 | *7/8*	38	32	B	1	12,500	1		**475.811***	
178 | *7*	14 | *1/2*	M 14 x 2,0	38	32	B	1	12,500	1		**475.817**	

Thread 5/8 x 11 NC on request | * packed 10 pieces per carton | ** with turtle bore

Knot Wheel Brushes, multiple rows

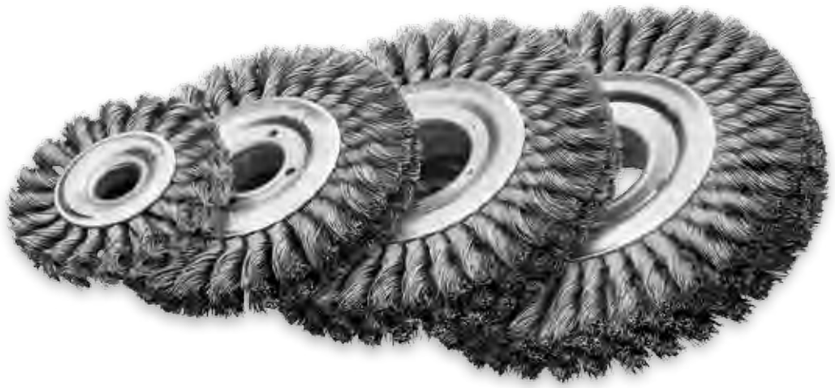

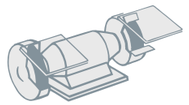

EAN

Knot Wheel Brushes, multiple rows

D mm | *inch*	A	EB	d Stand mm | *inch*	d min	H	ZF	Z x R	RPM max.	Pack.	**STH 0.35** *0.014"*	**STH 0.50** *0.020"*	**ROH 0.35** *0.014"*	**ROH 0.50** *0.020"*
100 | *4*	22-24	12	20 | *3/4*	10	21	B	20 x 2	12,500	1	*471.12K*	*471.22K*	*471.72K*	*471.82K*
100 | *4*	30-32	18	20 | *3/4*	10	21	B	20 x 3	12,500	1	*471.13K*	*471.23K*	*471.73K*	*471.83K*
100 | *4*	34-36	25	20 | *3/4*	10	21	B	20 x 4	12,500	1	*471.14K*	*471.24K*	*471.74K*	*471.84K*
115 | *4 1/2*	22-24	18	30 | *1 1/4*	10	23.5	B	22 x 2	12,500	1	*472.12K*	*472.22K*	*472.72K*	*472.82K*
115 | *4 1/2*	30-32	25	30 | *1 1/4*	10	23.5	B	22 x 3	12,500	1	*472.13K*	*472.23K*	*472.73K*	*472.83K*
115 | *4 1/2*	34-36	30	30 | *1 1/4*	10	23.5	B	22 x 4	12,500	1	*472.14K*	*472.24K*	*472.74K*	*472.84K*
125 | *5*	22-24	18	30 | *1 1/4*	13	28.5	B	24 x 2	12,500	1	*473.12K*	*473.22K*	*473.72K*	*473.82K*
125 | *5*	30-32	25	30 | *1 1/4*	13	28.5	B	24 x 3	12,500	1	*473.13K*	*473.23K*	*473.73K*	*473.83K*
125 | *5*	34-36	30	30 | *1 1/4*	13	28.5	B	24 x 4	12,500	1	*473.14K*	*473.24K*	*473.74K*	*473.84K*
150 | *6*	22-24	18	30 | *1 1/4*	13	31.5	O	28 x 2	12,500	1	*474.12K*	*474.22K*	*474.72K*	*474.82K*
150 | *6*	30-32	25	30 | *1 1/4*	13	31.5	O	28 x 3	12,500	1	*474.13K*	*474.23K*	*474.73K*	*474.83K*
150 | *6*	36-38	30	30 | *1 1/4*	13	31.5	O	28 x 4	12,500	1	*474.14K*	*474.24K*	*474.74K*	*474.84K*
178 | *7*	22-24	18	50 | *2*	16	37.5	O	34 x 2	12,500	1	*475.12K*	*475.22K*	*475.72K*	*475.82K*
178 | *7*	30-32	25	50 | *2*	16	37.5	O	34 x 3	12,500	1	*475.13K*	*475.23K*	*475.73K*	*475.83K*
178 | *7*	36-38	30	50 | *2*	16	37.5	O	34 x 4	12,500	1	*475.14K*	*475.24K*	*475.74K*	*475.84K*
200 | *8*	22-24	18	50 | *2*	16	41	O	38 x 2	9,000	1	*476.12K*	*476.22K*	*476.72K*	*476.82K*
200 | *8*	30-32	25	50 | *2*	16	41	O	38 x 3	9,000	1	*476.13K*	*476.23K*	*476.73K*	*476.83K*
200 | *8*	36-38	30	50 | *2*	16	41	O	38 x 4	9,000	1	*476.14K*	*476.24K*	*476.74K*	*476.84K*
250 | *10*	26-30	18	100 | *4*	20	42	O	52 x 2	5,000	1	*477.12K*	*477.22K*	*477.72K*	*477.82K*
250 | *10*	38-40	26	100 | *4*	20	42	O	52 x 3	5,000	1	*477.13K*	*477.23K*	*477.73K*	*477.83K*
250 | *10*	50-54	34	100 | *4*	20	42	O	52 x 4	5,000	1	*477.14K*	*477.24K*	*477.74K*	*477.84K*
300 | *12*	26-30	18	100 | *4*	30	56	O	58 x 2	5,000	1	*478.12K*	*478.22K*	*478.72K*	*478.82K*
300 | *12*	38-40	26	100 | *4*	30	56	O	58 x 3	5,000	1	*478.13K*	*478.23K*	*478.73K*	*478.83K*
300 | *12*	50-54	34	100 | *4*	30	56	O	58 x 4	5,000	1	*478.14K*	*478.24K*	*478.74K*	*478.84K*

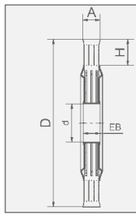

ZF = Knot type
Z = number of knots
R = number of rows

Joint Cleaning Brushes

Joint Cleaning Brushes

D mm | *inch*	A mm | *inch*	d mm | *inch*	H	Z	ZF	R	RPM max.	Pack.	**STA 0.50** | *0.020"* Art.-No.	**STA 0.80** | *0.031"* Art.-No.	**STM 0.50** | *0.020"* Art.-No.
300 | *12*	6 | *1/4*	20 | *3/4*	67	64	D	1	5,000	5	**478.200.06**	*478.300.06*	*478.500.06*
300 | *12*	8 | *5/16*	20 | *3/4*	67	64	D	1	5,000	5	**478.200.08**	**478.300.08**	*478.500.08*
300 | *12*	10 | *3/8*	20 | *3/4*	67	64	D	1	5,000	5	**478.200.10**	*478.300.10*	
300 | *12*	6 | *1/4*	25.4 | *1*	67	64	D	1	5,000	5	*478.225.06*	*478.325.06*	
300 | *12*	8 | *5/16*	25.4 | *1*	67	64	D	1	5,000	5	*478.225.08*	*478.325.08*	
300 | *12*	10 | *3/8*	25.4 | *1*	67	64	D	1	5,000	5	*478.225.10*	*478.325.10*	

Joint Cleaning Brushes
Joint cleaning brushes are used for the production of expansion joints in the construction of new linings as well as in restoration and reparation. The application of this knot wheel brush is usually alike with all pavements.

Brushes with brass coated steel wire STM are very stable, hence they are often used for cleaning concrete joints.

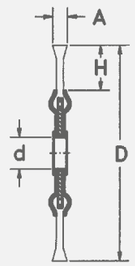

ZF = Knot type
Z = number of knots, R = number of rows

Item Nos. in bold are available ex stock.
Consider our minimum order value for *italic printed* article numbers (see page 148).

STA = steel wire, straight
STH = steel wire, high tensile, straight
STM = brass coated steel, straight
ROH = stainless steel wire, high tensile, straight

Pipeline Brushes / Stringer Bead Brushes

Pipeline-Brushes / Stringer Bead Brushes
LESSMANN-Pipelinebrushes are specially developed for professional use on U- and V-welds in the pipeline industry.

The remarkable features of the high quality LESSMANN Pipeline Brushes are the long lifetime and the quietness of running. They are especially narrow and therefore they are the perfect tool for cleaning all welds at tube connections.

Pipeline Brushes / Stringer Bead Brushes, left-right knotted
Left-right knotted pipeline brushes usually are more aggressive, hence they are often used for heavy brushing operations.
Besides the knots open less, therefore there are ideal for the treatment of edges.

Stainless Steel Brushes
LESSMANN-brushes with stainless steel wire have green side plates. We use wire with material number 1.4310. Material number 1.4401 can be used on request.
Information on working on stainless steel you find at www.lessmann.com

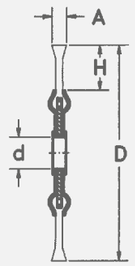

ZF = Knot type
Z = number of knots

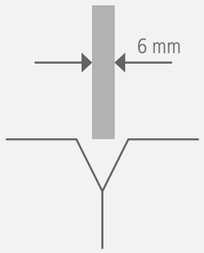

Item Nos. in bold are available ex stock.
Consider our minimum order value for *italic printed* article numbers (see page 148).

STH = steel wire, high tensile, straight

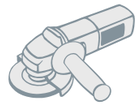

Pipeline-Brushes / Stringer Bead Brushes, Steel Wire							Bo. 22.2 | *7/8"*	M 14 x 2.0	W 5/8 x 11 NC
D mm | *inch*	A mm | *inch*	H	Z	ZF	RPM max.	Pack.*	**STH 0.50** | *0.020"* Art.-No.	**STH 0.50** | *0.020"* Art.-No.	**STH 0.50** | *0.020"* Art.-No.
100 | *4*	6 | *1/4*	19	28	D	20,000	10	available on demand	**471.207.28**	*471.208.28*
115 | *4 1/2*	6 | *1/4*	22	32	D	15,000	1	**472.201.EZ**		
115 | *4 1/2*	6 | *1/4*	22	32	D	15,000	5/10	**472.201.32**	*472.207.32*	*472.208.32*
115 | *4 1/2*	6 | *1/4*	22	39	D	15,000	10	**472.201.39**	available on demand	available on demand
125 | *5*	6 | *1/4*	26	40	D	15,000	1	**473.201.EZ**		
125 | *5*	6 | *1/4*	26	40	D	15,000	5/10	**473.201.40**	**473.207.40**	*473.208.40*
150 | *6*	6 | *1/4*	30	48	D	12,500	5/10	**474.201.48**	*474.207.48*	*474.208.48*
178 | *7*	6 | *1/4*	36	48	D	12,500	1	**475.201.EZ**		
178 | *7*	6 | *1/4*	36	48	D	12,500	5/10	**475.201.48**	*475.207.48*	*475.208.48*
178 | *7*	6 | *1/4*	30	56	D	12,500	5/10	**475.201.56**	*475.207.56*	*475.208.56*
178 | *7*	6 | *1/4*	30	76	D	12,500	5/10	**475.201.76**	*475.207.76*	*475.208.76*
230 | *9 1/16*	6 | *1/4*	56	76	D	12.500	1	*475.201.76*		

* Brushes with thread = packed 5 pieces per carton, brushes with bore = packed 10 pieces per carton

Pipeline Brushes / Stringer Bead Brushes

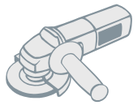

Pipeline-Brushes / Stringer Bead Brushes, Stainless Steel							Bo. 22.2 | *7/8"*	M 14 x 2.0	W 5/8 x 11 NC
D mm | *inch*	A mm | *inch*	H	Z	ZF	RPM max.	Pack.*	**ROH 0.50** | *0.020"* Art.-No.	**ROH 0.50** | *0.020"* Art.-No.	**ROH 0.50** | *0.020"* Art.-No.
100 | *2*	6 | *1/4*	19	28	D	20,000	10	available on demand	**471.807.28**	*471.808.28*
115 | *4 1/2*	6 | *1/4*	22	32	D	15,000	1	**472.801.EZ**		
115 | *4 1/2*	6 | *1/4*	22	32	D	15,000	5/10*	**472.801.32**	*472.807.32*	*472.808.32*
115 | *4 1/2*	6 | *1/4*	22	39	D	15,000	10	**472.801.39**	available on demand	available on demand
125 | *5*	6 | *1/4*	26	40	D	15,000	1	**473.801.EZ**		
125 | *5*	6 | *1/4*	26	40	D	15,000	5/10*	**473.801.40**	**473.807.40**	*473.808.40*
150 | *6*	6 | *1/4*	30	48	D	12,500	5/10*	**474.801.48**	*474.807.48*	*474.808.48*
178 | *7*	6 | *1/4*	36	48	D	12,500	5/10*	**475.801.48**	*475.807.48*	*475.808.48*
178 | *7*	6 | *1/4*	30	56	D	12,500	5/10*	*475.801.56*	*475.807.56*	*475.808.56*
178 | *7*	6 | *1/4*	30	76	D	12,500	5/10*	*475.801.76*	*475.807.76*	*475.808.76*

* Brushes with thread = packed 5 pieces per carton, brushes with bore = packed 10 pieces per carton

1 2 3

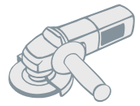

1 Pipeline-Brushes / Stringer Bead Brushes, rose bud								
D mm | *inch*	A mm | *inch*	d mm | *inch*	H	Z	ZF	RPM max.	Pack.	**STH 0.50** | *0.020"* Art.-No.
178 | *7*	6 | *1/4*	22.2 | *7/8*	28	76	B	12,500	10	**475.2B1.76**

2 Pipeline-Brushes / Stringer Bead Brushes, left-right knotted								
D mm | *inch*	A mm | *inch*	d mm | *inch*	H	Z	ZF	RPM max.	Pack.	**STH 0.50** | *0.020"* Art.-No.
178 | *7*	6 | *1/4*	22.2 | *7/8*	28	76	D	12,500	10	*475.2W1.76*

3 Pipeline-Brushes / Stringer Bead Brushes, encapsulated								
D mm | *inch*	A mm | *inch*	d mm | *inch*	H			RPM max.	Pack.	**STM 0.35** | *0.014"* Art.-No.
150 | *6*	6 | *1/4*	22.2 | *7/8*	29			9,000	10	*300.771.KG*
178 | *7*	6 | *1/4*	22.2 | *7/8*	43			9,000	10	*351.771.KG*

Pipeline Brushes / Stringer Bead Brushes with rose bud
Knotted brushes with rose bud have a longer life time. They are used for a professional treatment of weld seams in the tube and pipeline construction.

Pipeline Brushes / Stringer Bead Brushes, left-right knotted
Left-right knotted pipeline brushes usually are more aggressive, hence they are often used for heavy brushing operations.
Besides the knots open less, therefore they are ideal for the treatment of edges.

Pipeline Brushes / Stringer Bead Brushes, encapsulated
With encapsulated pipeline brushes a very exact and precise working is possible. By embedding in tough plastic the filling width always remains the same and early break of the wires can be prevented.
A working width of 6 mm still allows to reach U- and V- weld seams.

Item Nos. in bold are available ex stock.
Consider our minimum order value for *italic printed* article numbers (see page 148).

STH = steel wire, high tensile, straight
STM = brass coated steel, crimped
ROH = stainless steel wire, high tensile, straight

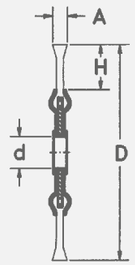

ZF = Knot type
Z = number of knots

Single Segment Brushes

Single Segment Brushes
These brushes are mainly used for deburring purposes in stationary machines or processing centres.
The construction of these brushes allows it to assemble them to roller brushes of any desired width. Many different filling materials like steel, stainless steel or abrasive nylon with various grit are at your disposal.

Outstanding Processing
The flexible bristles align to the different shapes of working pieces.
An important advantage of the single segment brushes compared to other grinding tools, such as pads or grinding discs, is their gentle treatment.
Furthermore the brushes do not become encrusted. They are suitable for deburring work and fine polishing of stainless steel, light metal or plastic material. Besides the executions listed on this page other diameters and grit sizes are available.

Stainless Steel Brushes
LESSMANN-brushes with stainless steel wire have a laser imprint.
Information on working on stainless steel you find at www.lessmann.com

Laser imprint of brushes

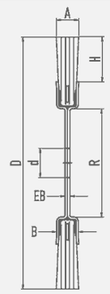

„**A**“ can be up to 4 mm larger than „**B**“

EB 3,0 mm with R > 60
EB 2,4 mm with R ≤ 60

For further information on abrasive filaments please see page 13.
Item Nos. in bold are available ex stock.
Consider our minimum order value for *italic printed* article numbers (see page 148).

SIC = silicon carbide bristles

1

2

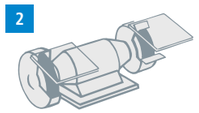

1 Single Segment Wheel Brushes, Silicon Carbide Bristles

D mm | *inch*	R	B	H	d Stand. mm | *inch*	d min./max.	RPM max.	Pack.	SIC 80/1.2 Art.-No.	SIC 120/1.1 Art.-No.	SIC 120/0.6 Art.-No.	SIC 180/1.0 Art.-No.	SIC 320/0.6 Art.-No.
80 | *3 1/4*	26	12	17	12 | *1/2*	12-16	12,000	5		available on demand	*310.841*	**310.851**	*310.871*
100 | *2*	30	12	21	12 | *1/2*	12-20	8,000	5	*320.821*	available on demand	**320.841**	**320.851**	**320.871**
125 | *5*	30	12	33	12 | *1/2*	12-20	8,000	5	*330.821*	available on demand	**330.841**	**330.851**	*330.871*
150 | *6*	50	14	32	12 | *1/2*	12-30	6,000	5	**340.821**	**340.831**	**340.841**	**340.851**	**340.871**
178 | *7*	50	14	46	12 | *1/2*	12-30	6,000	5	*350.821*	*350.831*	**350.841**	*350.851*	*350.871*
178 | *7*	60	16	43	12 | *1/2*	12-40	6,000	5		available on demand	*351.841*	*351.851*	*351.871*
200 | *8*	60	16	54	12 | *1/2*	12-40	6,000	5		*361.831*	*361.841*	*361.851*	*361.871*
200 | *8*	80	16	43	16 | *5/8*	16-60	6,000	5		available on demand	*362.841*	**362.851**	*362.871*
200 | *8*	100	16	32	16 | *5/8*	16-80	6,000	5		*360.831*	**360.841**	**360.851**	**360.871**
250 | *10*	100	16	57	16 | *5/8*	16-80	6,000	5		available on demand	*370.841*	**370.851**	**370.871**
250 | *10*	120	16	45	20 | *3/4*	20-100	3,600	5		available on demand	*371.841*	*371.851*	*371.871*
250 | *10*	150	19	30	25.4 | *1*	25-130	3,600	5		*372.831*	*372.841*	*372.851*	*372.871*
300 | *12*	120	16	70	20 | *3/4*	20-100	3,600	5		available on demand	*380.841*	*380.851*	*380.871*
300 | *12*	150	19	35	25.4 | *1*	25-130	3,600	5		*381.831*	*381.841*	*381.851*	*381.871*
300 | *12*	200	19	30	*25.4* | *1*	25.4-170	2,600	5			*38T.841*	*38T.851*	

2 Single Segment Wheel Brushes, Silicon Carbide Bristles, 2 rows

D mm | *inch*	R	B	H	d Stand. mm | *inch*	d min./max.	RPM max.	Pack.	SIC 120/0.6 Art.-No.	SIC 180/1.0 Art.-No.	SIC 320/0.6 Art.-No.
200 | *8*	80	27	43	16 | *5/8*	16-60	6,000	5	available on demand	*362.852*	available on demand
250 | *10*	100	27	58	16 | *5/8*	16-80	6,000	5	available on demand	*370.852*	available on demand

Bore must be indicated in the order. Standard bore delivery ex stock, short termed. Other bores are available with extra charge: 1 - 10 pcs. EUR 5,00 / 11 - 25 pcs. EUR 3,00

Single Segment Wheel Brushes

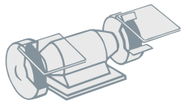

Single Segment Wheel Brushes, Steel Wire

D mm | *inch*	R	B	H	d Stand. mm | *inch*	d min./max.	RPM max.	Pack.	1 STA 0.20 | *0.008"* Art.-No.	1 STA 0.30 | *0.012"* Art.-No.	2 STL 0.35 | *0.014"* Art.-No.
80 | *3 1/4*	26	12	17	12 | *1/2*	12-16	12,000	5	**310.141**	*310.161*	available on demand
100 | *4*	30	12	21	12 | *1/2*	12-20	8,000	5	**320.141**	**320.161**	*320.707*
125 | *5*	30	12	33	12 | *1/2*	12-20	8,000	5	*330.141*	*330.161*	available on demand
125 | *5*	40	12	29	12 | *1/2*	12-25	8,000	5	available on demand	*331.161*	available on demand
150 | *6*	50	14	32	12 | *1/2*	12-30	6,000	5	**340.141**	**340.161**	*340.707*
178 | *7*	50	14	46	12 | *1/2*	12-30	6,000	5	*350.141*	**350.161**	available on demand
178 | *7*	60	16	43	12 | *1/2*	12-40	6,000	5	*351.141*	*351.161*	*351.707*
200 | *8*	60	16	54	12 | *1/2*	12-40	6,000	5	*361.141*	*361.161*	available on demand
200 | *8*	80	16	43	16 | *5/8*	16-60	6,000	5	*362.141*	*362.161*	*362.707*
200 | *8*	100	16	32	16 | *5/8*	16-80	6,000	5	**360.141**	**360.161**	*360.707*
250 | *10*	100	16	57	16 | *5/8*	16-80	6,000	5	*370.141*	**370.161**	available on demand
250 | *10*	120	16	45	20 | *3/4*	20-100	3,600	5	*371.141*	*371.161*	available on demand
300 | *12*	120	16	70	20 | *3/4*	20-100	3,600	5	*380.141*	*380.161*	available on demand
300 | *12*	150	19	55	25.4 | *1*	25.4-130	3,600	5		*381.161*	

Single Segment Wheel Brushes, Steel Wire, 2 rows

D mm | *inch*	R	B	H	d Stand. mm | *inch*	d min./max.	RPM max.	Pack.	STH 0.35 | *0.014"* Art.-No.
200 | *8*	80	20	43	16 | *5/8*	16-60	6,000	5	*362.272*
250 | *10*	100	20	58	16 | *5/8*	16-80	6,000	5	*370.272*

Bore must be indicated in the order. Standard bore delivery ex stock, short termed. Other bores are available with extra charge: 1 - 10 pcs. EUR 5,00 / 11 - 25 pcs. EUR 3,00

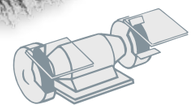

Single Segment Wheel Brushes, Stainless Steel Wire

D mm | *inch*	R	B	H	d Stand. mm | *inch*	d min./max.	RPM max.	Pack.	ROF 0.20 | *0.008"* Art.-No.	ROF 0.30 | *0.012"* Art.-No.
80 | *3 1/4*	26	12	17	12 | *1/2*	12-16	12,000	5	*310.341*	*310.361*
100 | *2*	30	12	21	12 | *1/2*	12-20	8,000	5	**320.341**	**320.361**
125 | *5*	30	12	33	12 | *1/2*	12-20	8,000	5	*330.341*	**330.361**
125 | *5*	40	12	29	12 | *1/2*	12-25	8,000	5	available on demand	*331.361*
150 | *6*	50	14	32	12 | *1/2*	12-30	6,000	5	**340.341**	**340.361**
178 | *7*	50	14	46	12 | *1/2*	12-30	6,000	5	*350.341*	**350.361**
178 | *7*	60	16	43	12 | *1/2*	12-40	6,000	5	*351.341*	*351.361*
200 | *8*	60	16	54	12 | *1/2*	12-40	6,000	5	*361.341*	*361.361*
200 | *8*	80	16	43	16 | *5/8*	16-60	6,000	5	*362.341*	*362.361*
200 | *8*	100	16	32	16 | *5/8*	16-80	6,000	5	*360.341*	**360.361**
250 | *10*	100	16	57	16 | *5/8*	16-80	6,000	5	*370.341*	*370.361*
250 | *10*	120	16	45	20 | *3/4*	20-100	6,000	5	*371.341*	*371.361*
300 | *12*	120	16	70	20 | *3/4*	20-100	3,600	5	*380.341*	*380.361*
300 | *12*	150	19	55	25.4 | *1*	25.4-130	3,600	5		*381.361*

Bore must be indicated in the order. Standard bore delivery ex stock, short termed. Other bores are available with extra charge: 1 - 10 pcs. EUR 5,00 / 11 - 25 pcs. EUR 3,00

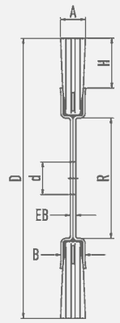

„A" can be up to 4 mm larger than **„B"**
EB 3,0 mm with R > 60
EB 2,4 mm with R ≤ 60

For further information on abrasive filaments please see page 13.
Item Nos. in bold are available ex stock.
Consider our minimum order value for *italic printed* article numbers (see page 148).

STA = steel wire, crimped
STH = steel wire, high tensile, crimped
STL = cord wire, crimped
ROF = stainless steel wire, crimped

Wheel Brushes

Wheel Brushes
Wheel brushes filled with crimped wire are used for the purpose of obtaining different surface finishing:
- the removal of rust, paint and dirt
- for roughening, deburring, stripping or polishing.

Big or Small?
A decisive factor for choosing the most suitable brush is the wire and tube diameter. Brushes with a larger tube diameter (measure R) are filled with more wire, are more aggressive and have a longer life.
In our catalogue are the usual tube diameters – other diameters can also be supplied.
More technical instruction such as peripheral speed etc. see pages 8 - 10.

The bore must be indicated in the order. Without any instruction delivery will be with standard bore "d Stand".

Stainless Steel Brushes
Information on working on stainless steel you find at www.lessmann.com

Other filling materials, filling diameters and special executions
Take advantage of the LESSMANN range of products, of the experience in developing and producing brushes! We are able to produce special executions on demand.

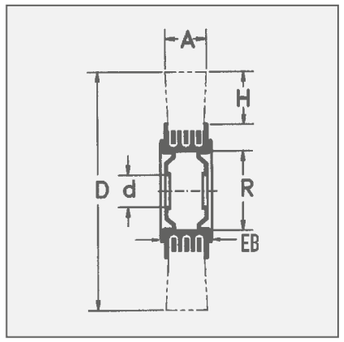

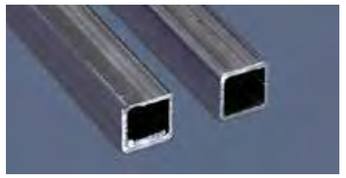

Plate with tube 80 and 100 (Set 4 / 5)

Adapter Set
All brushes are supplied with adapter sets for easy mounting on all popular grinding machines. The adapters have the following dimensions:

Set 1 / tube 30:
30 / 1" / 22,2 / 20 / 16 / 1/2" / 12
Set 2 / tube 40:
40 / 32 / 1" / 22.2 / 20 / 16 / 1/2"
Set 3 / tube 50:
50 / 32 / 1" / 22.2 / 20 / 16 / 1/2"
Set 4 / tube 80 + 100:
brushes with metal discs, bore 50.8 and double keyway 7x13; plus adapter to bore 30.
Set 5 / tube 80 + 100:
brushes with metal discs, bore 50.8 and double keyway 7x13; plus adapter to bore 32.

By usage without adapter set the actual size might be up to 0.2 mm below nominal size.

Item Nos. in bold are available ex stock.
Consider our minimum order value for *italic printed* article numbers (see page 148).

STA = steel wire, crimped
STM = brass coated steel, crimped

1 2

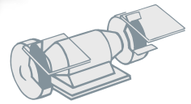

EAN

Wheel Brushes, Steel Wire

D mm | *inch*	A	EB	R	H	d Stand. mm | *inch*	d min./max.	RPM max.	Pack.	1 **STA 0.15** | *0.006"* Art.-No.	1 **STA 0.20** | *0.008"* Art.-No.	1 **STA 0.30 / *0.35** *0.012" / 0.014"*	2 **STM 0.30** | *0.012"* Art.-No.
80 | *3 1/4*	18-20	18	20	20	10 | *3/8*	10-20	10,000	1	available on demand	**312.142**	**312.162**	
80 | *3 1/4*	25-27	24	20	20	10 | *3/8*	10-20	10,000	1	available on demand	*312.143*	**312.163**	
100 | *4*	20-22	19	30	23	Set 1	10-30	8,000	1	*323.132*	**323.142**	**323.162**	
100 | *4*	28-30	25	30	23	Set 1	10-30	8,000	1	*323.133*	**323.143**	**323.163**	
125 | *5*	21-23	20	40	27	Set 2	13-40	6,000	1	*334.132*	**334.142**	**334.162**	
125 | *5*	29-31	26	40	27	Set 2	13-40	6,000	1	available on demand	*334.143*	**334.163**	
150 | *6*	22-24	20	40	33	Set 2	13-40	6,000	1	*344.132*	**344.142**	**344.172***	
150 | *6*	30-34	26	40	33	Set 2	13-40	6,000	1	*344.133*	**344.143**	**344.173***	
150 | *6*	23-25	22	50	33	Set 3	13-50	6,000	1	*345.132*	**345.142**	**345.162**	*345.762*
150 | *6*	30-34	29	50	33	Set 3	13-50	6,000	1	*345.133*	**345.143**	**345.163**	
178 | *7*	23-26	22	50	37	Set 3	16-50	6,000	1	available on demand	**355.142**	**355.162**	*355.762*
178 | *7*	32-35	29	50	37	Set 3	16-50	6,000	1	*355.133*	**355.143**	**355.163**	
200 | *8*	24-27	22	50	48	Set 3	16-50	6,000	1	*365.132*	**365.142**	**365.172***	
200 | *8*	35-38	29	50	48	Set 3	16-50	6,000	1	*365.133*	**365.143**	**365.173***	
200 | *8*	28-32	25	80	38	Set 4+1	16-80	4,500	1	available on demand	**366.142**	**366.162**	*366.762*
200 | *8*	40-45	33	80	38	Set 4+1	16-80	4,500	1	available on demand	*366.143*	**366.163**	
250 | *10*	30-35	25	80	50	Set 4+1	20-80	3,600	1	available on demand	**376.142**	**376.162**	
250 | *10*	42-45	33	80	50	Set 4+1	20-80	3,600	1	available on demand	available on demand	**376.163**	
250 | *10*	32-37	26	100	50	Set 4+1	20-100	3,600	1	available on demand	**377.142**	**377.162**	*377.762*
250 | *10*	43-48	35	100	50	Set 4+1	20-100	3,600	1	available on demand	*377.143*	**377.163**	
250 | *10*	55-60	45	100	50	Set 4+1	20-100	3,600	1	available on demand	*377.144*	**377.164**	
300 | *12*	35-40	26	100	60	Set 4	30-100	3,000	1	available on demand	**387.142**	**387.162**	
300 | *12*	47-52	35	100	60	Set 4	30-100	3,000	1	available on demand	*387.143*	**387.163**	
350 | *14*	35-40	26	100	85	Set 5	32-100	2,400	1	available on demand	*397.142*	**397.172***	
350 | *14*	55-60	35	100	85	Set 5	32-100	2,400	1	available on demand	*397.143*	**397.173***	

Bore must be indicated in the order. Standard bore delivery ex stock, short termed. Other bores are available with extra charge: 1 - 10 pcs. EUR 5.00 / 11 - 25 pcs. EUR 3.00

Wheel Brushes

EAN

Wheel Brushes, Stainless Steel

D mm | *inch*	A	EB	R	H	d Stand. mm | *inch*	d min./max.	RPM max.	Pack.	**ROF 0.20** | *0.008"* Art.-No.	**ROF 0.30** | *0.012"* Art.-No.
80 | *3 1/4*	18-20	18	20	20	10 | *3/8*	10-20	10,000	1	*312.342*	**312.362**
80 | *3 1/4*	25-27	24	20	20	10 | *3/8*	10-20	10,000	1	available on demand	*312.363*
100 | *4*	20-22	19	30	23	Set 1	10-30	8,000	1	*323.342*	**323.362**
100 | *4*	28-30	25	30	23	Set 1	10-30	8,000	1	*323.343*	**323.363**
125 | *5*	21-23	20	40	27	Set 2	13-40	6,000	1	*334.342*	**334.362**
125 | *5*	29-31	26	40	27	Set 2	13-40	6,000	1	*334.343*	**334.363**
150 | *6*	22-24	20	40	33	Set 2	13-40	6,000	1	*344.342*	**344.362**
150 | *6*	30-34	26	40	33	Set 2	13-40	6,000	1	available on demand	**344.363**
150 | *6*	23-25	22	50	33	Set 3	13-50	6,000	1	*345.342*	**345.362**
150 | *6*	30-34	30	50	33	Set 3	13-50	6,000	1	*345.343*	**345.363**
178 | *7*	23-26	22	50	37	Set 3	16-50	6,000	1	**355.342**	**355.362**
178 | *7*	32-35	30	50	37	Set 3	16-50	6,000	1	available on demand	**355.363**
200 | *8*	24-27	22	50	48	Set 3	16-50	6,000	1	**365.342**	**365.362**
200 | *8*	35-38	30	50	48	Set 3	16-50	6,000	1	*365.343*	**365.363**
200 | *8*	28-32	29	80	38	Set 4+1	16-80	4,500	1	*366.342*	**366.362**
200 | *8*	40-45	39	80	38	Set 4+1	16-80	4,500	1	*366.343*	**366.363**
250 | *10*	30-35	29	80	50	Set 4+1	20-80	3,600	1	*376.342*	**376.362**
250 | *10*	42-45	39	80	50	Set 4+1	20-80	3,600	1	*376.343*	**376.363**
250 | *10*	32-37	30	100	50	Set 4+1	20-100	3,600	1	*377.342*	**377.362**
250 | *10*	43-48	39	100	50	Set 4+1	20-100	3,600	1	*377.343*	**377.363**
300 | *12*	35-40	30	100	60	Set 4	30-100	3,000	1	*387.342*	**387.362**
300 | *12*	47-52	39	100	60	Set 4	30-100	3,000	1	*387.343*	*387.363*
350 | *14*	35-40	30	100	85	Set 5	32-100	2,400	1	available on demand	*397.362*

Bore must be indicated in the order. Standard bore delivery ex stock, short termed. Other bores are available with extra charge: 1 - 10 pcs. EUR 5.00 / 11 - 25 pcs. EUR 3.00

Plate with tube 80 and 100 (Set 4 / 5)

EAN

Wheel Brushes, Brass Wire

D mm | *inch*	A	EB	R	H	d Stand. mm | *inch*	d min./max.	RPM max.	Pack.	**MES 0.20** | *0.008"* Art.-No.	**MES 0.30** | *0.012"* Art.-No.
80 | *3 1/4*	18-20	18	20	20	10 | *3/8*	10-20	10,000	1	**312.542**	*312.562*
80 | *3 1/4*	25-27	24	20	20	10 | *3/8*	10-20	10,000	1	*312.543*	*312.563*
100 | *4*	20-22	19	30	23	Set 1	10-30	8,000	1	**323.542**	*323.562*
100 | *4*	28-30	25	30	23	Set 1	10-30	8,000	1	*323.543*	*323.563*
125 | *5*	21-23	20	40	27	Set 2	13-40	6,000	1	**334.542**	*334.562*
125 | *5*	29-31	26	40	27	Set 2	13-40	6,000	1	*334.543*	available on demand
150 | *6*	22-24	20	40	33	Set 2	13-40	6,000	1	**344.542**	**344.562**
150 | *6*	30-32	26	40	33	Set 2	13-40	6,000	1	*344.543*	**344.563**
150 | *6*	23-25	22	50	33	Set 3	13-50	6,000	1	**345.542**	**345.562**
150 | *6*	30-34	30	50	33	Set 3	13-50	6,000	1	*345.543*	**345.563**
178 | *7*	23-26	22	50	37	Set 3	16-50	6,000	1	*355.542*	**355.562**
178 | *7*	32-35	30	50	37	Set 3	16-50	6,000	1	*355.543*	**355.563**
200 | *8*	24-27	22	50	48	Set 3	16-50	6,000	1	**365.542**	**365.562**
200 | *8*	35-38	30	50	48	Set 3	16-50	6,000	1	*365.543*	**365.563**
200 | *8*	28-32	29	80	38	Set 4+1	16-80	4,500	1	**366.542**	**366.562**
200 | *8*	40-45	39	80	38	Set 4+1	16-80	4,500	1	*366.543*	*366.563*
250 | *10*	30-35	29	80	50	Set 4+1	20-80	3,600	1	*376.542*	*376.562*
250 | *10*	42-45	39	80	50	Set 4+1	20-80	3,600	1	available on demand	available on demand
250 | *10*	32-37	30	100	50	Set 4+1	20-100	3,600	1	available on demand	**377.562**
250 | *10*	43-48	39	100	50	Set 4+1	20-100	3,600	1	available on demand	available on demand
300 | *12*	35-40	30	100	60	Set 4	30-100	3,000	1	available on demand	**387.562**
300 | *12*	47-52	39	100	60	Set 4	30-100	3,000	1	available on demand	available on demand
350 | *14*	35-40	30	100	85	Set 5	32-100	2,400	1	available on demand	*397.562*

Bore must be indicated in the order. Standard bore delivery ex stock, short termed. Other bores are available with extra charge: 1 - 10 pcs. EUR 5.00 / 11 - 25 pcs. EUR 3.00

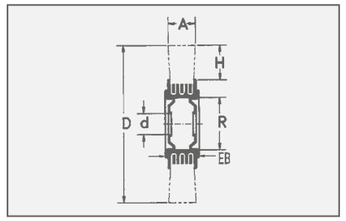

Item Nos. in bold are available ex stock.
Consider our minimum order value for *italic printed* article numbers (see page 148).

ROF = stainless steel wire, crimped

MES = brass wire, crimped

Brushes for the wood machining industry

Satin Brushes
Satin brushes are the perfect tool for satining, polishing, abrading/smoothing, matting and structuring.

Staple Set Wheel and Disc Brushes
Wheel and Disc Brushes with abrasive nylon filament are used fort he wood machining industry. Used on angle grinders, the disc brushes are ideal for maintaining, cleaning, strucutring or polishing wood.
Besides the brushes are used for giving wood a rustic effect or for roughening it before treating with colour or lacquer.
The brushes are very effective when working on large surfaces.

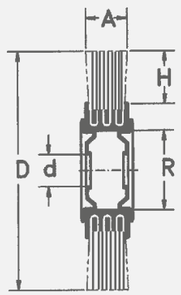

Satin Brushes

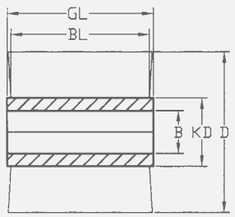

Wheel Brushes

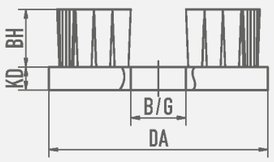

Disc Brushes

Item Nos. in bold are available ex stock.
Consider our minimum order value for *italic printed* article numbers (see page 148).

STM	= brass coated steel, crimped
STL	= cord wire, crimped
ROF	= stainless steel wire, crimped
SIC	= silicon carbide bristles
FIB	= fibre
PA	= polyamide, crimped

EAN

Satin Brushes

	D mm | *inch*	A mm | *inch*	H	d mm | *inch*	RPM max.	Pack.	**ROF 0.20** | *0.008"* Art.-No.	**SIC 80/1.2** Art.-No.	**STL 0.25** | *0.010"* Art.-No.	**FIB/PA 0.4** | *0.016"* Art.-No.
1	100 | *4*	12 | 1/2	21	19.2 | *3/4*	8,000	5	*320.341.19*	*320.821.19*	*320.703.19*	
2	100 | *4*	70 | *2 3/4*	23	19.2 | *3/4*	8,000	1	**323.348.19**	**323.828.19**	**323.704.19**	
	100 | *4*	100 | *4*	23	19.2 | *3/4*	8,000	1	*323.305.19*	*323.805.19*	*323.705.19*	**323.900.10**

	D mm | *inch*	A mm | *inch*	H	d mm | *inch*	RPM max.	Pack.	**STM 0.35** | *0.014"* Art.-No.	**SIC 80/1.2** Art.-No.	**SIC K 120/1.1** Art.-No.
2	100 | *4*	120 | *4 3/4*	23	12.7 | *1/2*	8,000	1	*323.770.13*	*323.820.13*	*323.830.13*

Bore must be indicated in the order. Standard bore delivery ex stock, short termed. Other bores are available with extra charge: 1 - 10 pcs. EUR 5.00 / 11 - 25 pcs. EUR 3.00

3 Staple Set Wheel Brushes

D mm | *inch*	GL	BL	B	KD	RPM max.	Pack.	**SIC 46/1.6** Art.-No.	**SIC 60/1.5** Art.-No.	**SIC 80/1.2** Art.-No.	**SIC 120/1.10** Art.-No.
140 | *5 1/2*	58	40	M 14	80	2,500	1	*402.881*	*402.882*	**402.880**	*402.883*
140 | *5 1/2*	90	75	M 14	80	2,500	1	*402.891*	*402.892*	**402.890**	*402.893*

4 Staple Set Disc Brushes

Filling	DA mm | *inch*	KD mm | *inch*	BH mm | *inch*	B/G	RPM max.	Pack.	Art.-No.
SIC 46/1.6	130 | *5 1/8*	20 | *3/4*	50 | *2*	M 14 x 2.0	2,500	1	*405.843*
SIC 60/1.5	130 | *5 1/8*	20 | *3/4*	50 | *2*	M 14 x 2.0	2,500	1	*405.844*
SIC 80/1.2	130 | *5 1/8*	20 | *3/4*	50 | *2*	M 14 x 2.0	2,500	1	**405.845**

Special Models

Band Saw Brushes
Wheel Brushes in circular saws or band saws are used for cleaning the chipping space. A wheel brush with diameter 80-100 mm is pressed against the saw blade (circular or band saw). By moving the saw blade or band the brush is rolling and it taking the chipping out of the shipping space. Hence a built-up edge is prevented and the durability of the saw blade extended. The used wheel brushes usually are with steel wire, corded wire or nylon filament. The brushes are suitable for all common machines.

Stripping Brushes
For the removal of laquer and other insulations from cables and electric equipment. The polished surface and the concentric running enable soft removal of laquer from the wires.

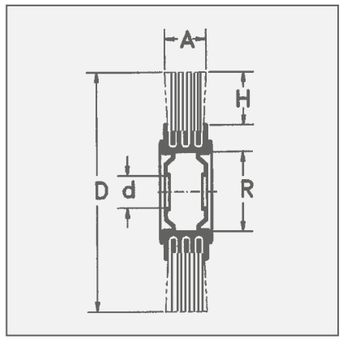

Item Nos. in bold are available ex stock.
Consider our minimum order value for *italic printed* article numbers (see page 148).

STA	= steel wire, crimped
STM	= brass coated steel, crimped
STL	= cord wire, crimped
PA	= polyamide, crimped

1 Band Saw Brushes, polyamide

D	A	H	d	RPM max.	Pack.	**PA 0.50** | *0.020"* Art.-Nr.	**PA 0.80** | *0.031"* Art.-No.	**PA 1.00** | *0.039"* Art.-No.
85	10	14	12	8,000	10	*300.091*		
100	13	21	12	8,000	10	**320.001**		
100	13	21	13	8,000	10	**320.004**		
100	13	21	SW 17	8,000	5	**320.00K.17**		
100	13	21	12	8,000	10		**320.003**	
100	20-22	23	12	8,000	25		*323.002*	
100	20	23	12	8,000	5		*323.003**	
100	13	21	12	8,000	25			**320.009**
125	13	33	13	8,000	5			**330.001**

* bore with plastic sleeve

2 Band Saw Brushes, steel wire

D	A	H	d	RPM max.	Pack.	**STA 0,20** Art.-No.	**STA 0,30** Art.-No.	**STM 0,20** Art.-No.	**STM 0,30** Art.-No.	**STL 4 x 0,25** Art.-No.
80	12	20	10	15,000	10	*312.141*				
100	12	21	SW 17	8,000	5		**320.16K.17**			
100	13	21	12.7	4,500	10		**320.161.12**			
60	10-12	19	6	15,000	10			*300.742*		
80	15	27	6.8	15,000	10			*311.742.01*		
80	15	27	8	15,000	10				**311.762**	
80	18-20	27	6	15,000	10					**310.702.06**

3 Stripping Brushes

D mm | *inch*	A mm | *inch*	d mm | *inch*	Pack.	**STA 0.10** | *0.004"* Art.-No.	**STA 0.15** | *0.006"* Art.-No.	**STA 0.20** | *0.008"* Art.-No.	**STA 0.25** | *0.010"* Art.-No.	**STA 0.30** | *0.012"* Art.-No.
30 | *1 1/4*	20 | *3/4*	6 | *1/4*	10	*301.213.10*	*301.213.15*	*301.213.20*		*301.213.30*
35 | *1 1/2*	20 | *3/4*	6 | *1/4*	10		*301.214.15*	**301.214.20**	available on demand	*301.214.30*
40 | *1 3/8*	25 | *1*	10 | *3/8*	10		*301.225.15*	**301.225.20**	*301.225.25*	*301.225.30*
80 | *3*	30 | *1 1/4*	16 | *5/8*	10			*301.236.20*	available on demand	*301.236.30*

Special Models

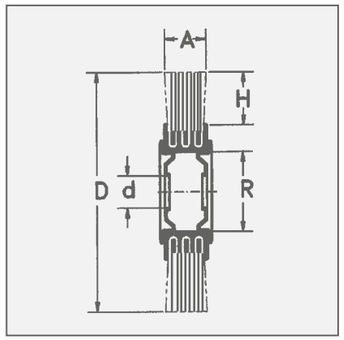

Small diameter crimped wheels SDW
LESSMANN small diameter crimped wheels have a manifold use, e.g. for deburring, cleaning, derusting or paint stripping on various work pieces and surfaces. A typical application e.g. is the cleaning of interior and exterior threads or the treatment of areas which are hard to reach.
The brushes are inserted directly into the machine or are mounted into a drilling machine or fast-moving item with a suitable drive arbor. Depending on the application and requirements several brushes can be mounted in a row. Suitable adapters are available on request.
The typical filling material LESSMANN offers is steel wire, stainless steel wire or abrasive nylon. On request other wire diameters and filling materials are available. All brushes are manufactured with a copper shell.

Wheel Brushes for the treatment of hard metal
Wheel brushes with diamond filling are often used for the rounding of edges of carbide or diamond tools.
Cutting edges on carbide tools extend the lifetime and allow a higher cutting speed. The treatment on major cutting edges of drills are mainly operated manually. LESSMANN wheel brushes with diamond support to decrease abrasion and to improve the surface quality of the work piece. Due to the consistent and narrow filling a clean and steady dipping of the edges is possible.
Surfaces of chip flutes of carbide drills are finished with brushes with aluminum oxide filling material. Finished chip flutes have a better process stability when drilling.

Stainless Steel Brushes
Information on working on stainless steel you find at www.lessmann.com

Item Nos. in bold are available ex stock.
Consider our minimum order value for *italic printed* article numbers (see page 148).

STA	= steel wire, crimped
ROF	= stainless steel wire, crimped
SIC	= silicon carbide bristles
AO	= aluminium oxide bristles

1

2

3

Small Diameter crimped Wheels SDW

1

D mm | *inch*	A mm | *inch*	d mm | *inch*	H mm | *inch*	RPM max.	Pack.	**STA 0.15** | *0.006"* Art.-No.	**STA 0.20** | *0.008"* Art.-No.	**STA 0.35** | *0.014"* Art.-No.	**ROF 0.15** | *0.006"* Art.-No.
50 | *2*	10 | *3/8*	13 | *1/2*	13 | *1/2*	20,000	10	**35E.136**	**35E.146**		**35E.336**
63 | *2 1/2*	10 | *3/8*	13 | *1/2*	20 | *3/4*	20,000	10		**36E.146**	**36E.176**	
75 | *3*	12 | *1/2*	13 | *1/2*	20 | *3/4*	20,000	10				**37E.336**
75 | *3*	12 | *1/2*	16 | *5/8*	22 | *7/8*	15,000	10	**37E.137**	**37E.147**		

2

D mm | *inch*	A mm | *inch*	d mm | *inch*	H mm | *inch*	RPM max.	Pack.	**SIC K120/0.6** Art.-No.	**SIC K180/0.9** Art.-No.	**SIC K320/0.6** Art.-No.
50 | *2*	10 | *3/8*	13 | *1/2*	12 | 1/2	15,000	10	**35E.846**	**35E.856**	**35E.876**
50 | *2*	10 | *3/8*	16 | *5/8*	12 | 1/2	15,000	10	**35E.847**	**35E.857**	**35E.877**
63 | *2 1/2*	10 | *3/8*	13 | *1/2*	18 | *5/8*	15,000	10	**36E.846**	**36E.856**	**36E.876**
63 | *2 1/2*	10 | *3/8*	16 | *5/8*	18 | *5/8*	15,000	10	**36E.847**		**36E.877**

3 Wheel Brushes for the treatment of hard metal

D mm | *inch*	A mm | *inch*	d mm | *inch*	H mm | *inch*	RPM max.	Pack.	**Diamant K400** Art.-No.	**AO 600** Art.-No.
100 | *4*	12 | *1/2*	16 | *5/8*	27 | *1*	3,000	1		*320.061**
150 | *6*	5 | *13/64*	20 | *3/4*	23 | *59/64*	3,000	1	*408.819.DB*	
150 | *6*	10 | *3/8*	20 | *3/4*	23 | *59/64*	3,000	1	*408.829.DB*	
150 | *6*	15 | *5/8*	20 | *3/4*	23 | *59/64*	3,000	1	*408.839.DB*	*345.051**

* Filling with angular cut

Adapters
With these adapters the bore can be reduced to the required size.
The wheel brushes are supplied with adapter sets which makes it possible to mount the brushes on all popular grinding machines.
The adapters have the following dimensions:

Set 1 / tube 30
30 / 1" / 22,2 / 20 / 16 / 1/2" / 12
Set 2 / tube 40:
40 / 32 / 1" / 22,2 / 20 / 16 / 1/2"
Set 3 / tube 50:
50 / 32 / 1" / 22,2 / 20 / 16 / 1/2"
Set 4 / tube 80 + 100:
brushes with metal discs, bore 50.8 and double keyway 7x13; plus adapter to bore 30. Further reduction possible with set 1.
Set 5 / tube 80 + 100:
brushes with metal discs, bore 50.8 and double keyway 7x13; plus adapter to bore 32. Further reduction possible with set 1.

A technical advice and safety information leaflet is included.

The practical adapter sets can also be ordered separately.

Single plastic reducing rings in many different dimensions can be supplied ex stock.

Drive Arbors
For use on drilling machines.

Metal Discs
Brushes with tube diameter 80 and 100 mm are supplied with our standard metal plates made of steel. Occasionally these metal plates are also required for brushes with smaller tubes. The metal plates on this page are therefore also suitable for the brushes on page 29 - 31. Please indicate the required bore size on your order and note that normally two metal plates are required for one brush.

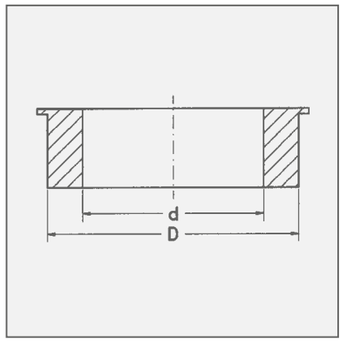

Item Nos. in bold are available ex stock.
Consider our minimum order value for *italic printed* article numbers (see page 148).

Adapter Sets

			D	d	Pack.	Art.-No.
1	Set 1	Tube 30	30	1" - 22.2 - 20 - 16 - 1/2" - 12	2	**000.886.63**
2	Set 2	Tube 40	40	32 - 1" - 22.2 - 20 - 16 - 1/2"	2	**000.886.64**
3	Set 3	Tube 50	50	32 - 1" - 22.2 - 20 - 16 - 1/2"	2	**000.886.65**
4	Set 4	Tube 80/100	50.8	30 (further adapters with Set 1)	2	**000.886.68**
	Set 5	Tube 80/100	50.8	32	2	**000.888.32**
5	Single plastic reducing rings in many different dimensions can be supplied ex stock.					

EAN

Drive Arbors

D mm | *inch*	L mm | *inch*	Thread	Pack.	6 Art.-No.
6 | *1/4*	60 | *2 3/8*	M 10 x 1.5	1	**000.041**
10 | *3/8*	60 | *2 3/8*	M 10 x 1.5	1	**000.042**
10 | *3/8*	75 | *3*	M 14 x 2.0	1	**000.043**

D mm | *inch*	L mm | *inch*	Thread	Pack.	7 Art.-No.
6 | *1/4*	40 | *1 3/8*	M 10 left	1	**000.044**
6 | *1/4*	50 | *2*	M 12 left	1	**000.045**

8 Metal Discs as Spare Part

	Pack.	Art.-No.		Pack.	Art.-No.		Pack.	Art.-No.		Pack.	Art.-No.		Pack.	Art.-No.
R 30	2	*000.631*	R 40	2	*000.641*	R 50	2	*000.651*	R 80	2	*000.661*	R100*	2	*000.671*

Bore must be indicated!
* On request with double keyset 12 x 7 (50.8 / 52.9 / 54.5)

EAN

9 Thread Adapter

from	to	L mm | *inch*	Pack.	Art.-No.
Internal W 1/2	Internal M 12	40 | *1 3/8*	1	**001.211**
Internal W 1/2	Internal M 10	40 | *1 3/8*	1	**001.212**
Internal W 3/8	Internal M 10	40 | *1 3/8*	1	**001.215**
External M 10	Internal W 1/2	40 | *1 3/8*	1	**001.222**
External M 10	Internal W 3/8	40 | *1 3/8*	1	**001.225**

LESSMANN®
THE GERMAN BRUSH COMPANY

DEBURRING BRUSHES

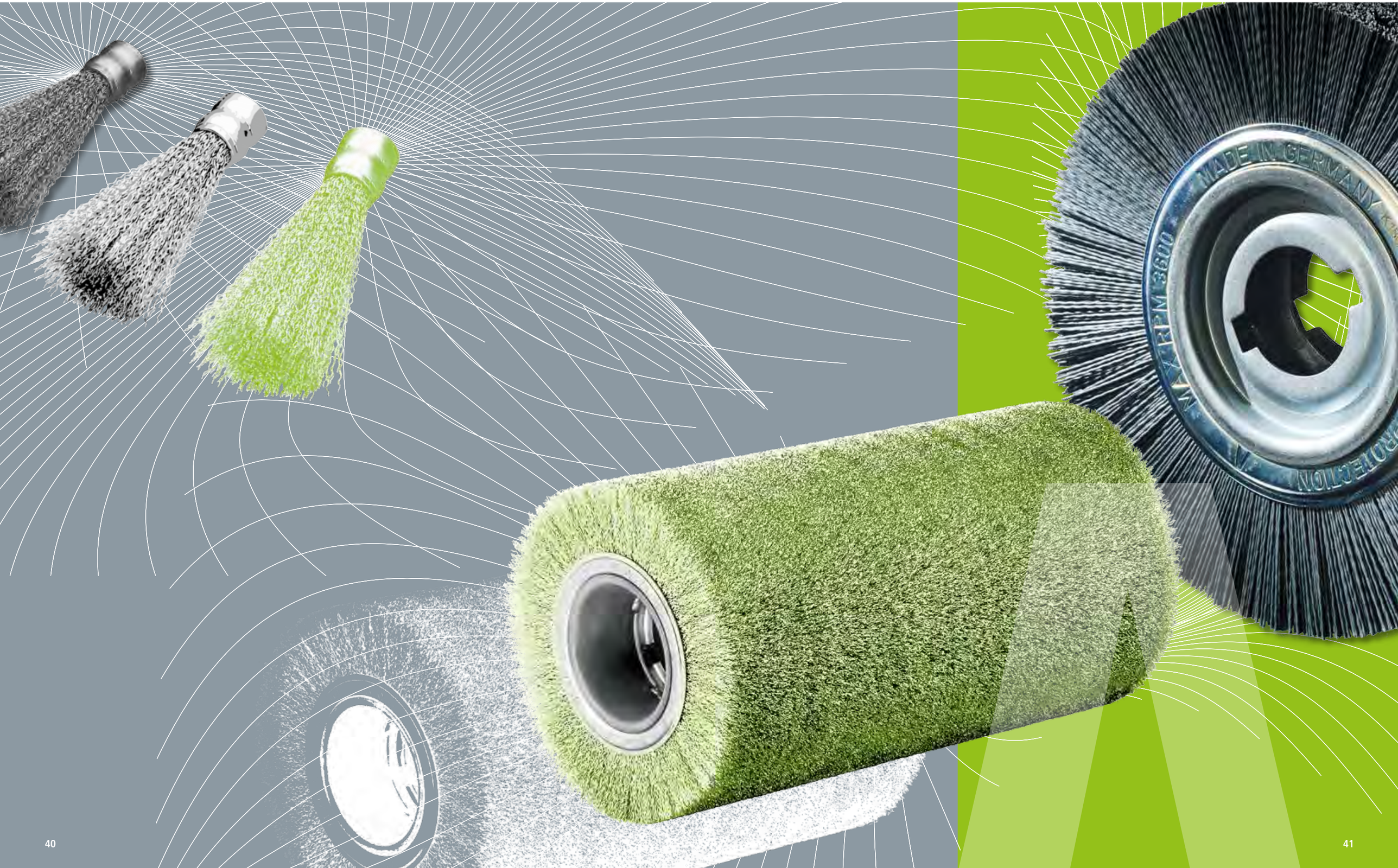

Deburring Brushes

Part before brushing

Part after brushing

Deburring Brushes
Specially developed wheel brushes for deburring. These are suitable for all common deburring machines. Although they are heavier than other brushes because of their dense filling, we exclude any inbalance by evenly arranged filling material and the testing of every brush. Filled with high-quality wire, these brushes have a longer service life.

All brushes are with double keyway. Please indicate the required bore.

On the following pages you will find the standard measurements. Special measurements are available on request.

Deburring Brushes with Cord Wire
STL / ROL
Deburring Brushes with cord wire are usually used for working on very hard materials. This wire construction gives the wires additional hold, hence the output of the brush is increased.

Encapsulated Deburring Brushes
Are ideal for an aggressive and very exact working. An early beak of the wires can be prevented. Therefore the brush has a longer life time and a better durability.

Stainless Steel Brushes
LESSMANN brushes with stainless steel wire have green site plates.
More information for brush applications on stainless materials you will find at www.lessmann.com

For more information about deburring please ask for our leaflet "Deburring with brushes".

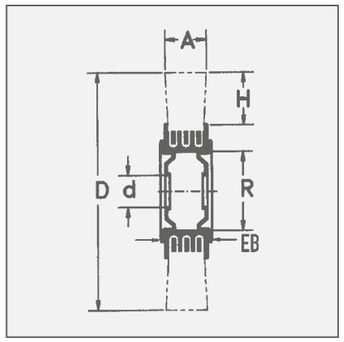

Item Nos. in bold are available ex stock.
Consider our minimum order value for *italic printed* article numbers (see page 148).

STH = steel wire, high tensile, crimped
STM = brass coated steel, crimped
STL = cord wire, crimped

1 2

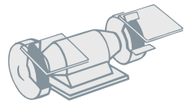

EAN **1 Deburring Brushes, Steel Wire**

D mm | *inch*	A mm | *inch*	EB	R mm | *inch*	H mm | *inch*	d Stand.	RPM max.	Pack.	**STH 0.20** | *0.008"* Art.-No.	**STH 0.35** | *0.014"* Art.-No.	**STH 0.50** | *0.020"* Art.-No.
250 | *10*	60 | *2 3/8*	58	100 | *4*	50 | *2*	50.8	3,600	1	**377.051**	**377.053**	**377.054**
250 | *10*	60 | *2 3/8*	55	100 | *4*	50 | *2*	100	3,600	1	*377.051.00*	*377.053.00*	*377.054.00*
250 | *10*	60 | *2 3/8*	53	100 | *4*	50 | *2*	50.8	3,600	1	*377.051.T1*	*377.053.T1*	*377.054.T1*
250 | *10*	60 | *2 3/8*	50	100 | *4*	50 | *2*	100	3,600	1	*377.051.TA*	**377.053.TA**	*377.054.TA*
250 | *10*	80 | *3 1/4*	79	100 | *4*	50 | *2*	50.8	3,600	1	*377.052*	*377.095*	*377.077*
250 | *10*	100 | *4*	99	100 | *4*	50 | *2*	50.8	3,600	1	*377.059*	*377.066*	*377.096*
300 | *12*	60 | *2 3/8*	49	100 | *4*	60 | *2 3/8*	50.8	3,000	1	*387.051*	*387.053*	*387.054*
300 | *12*	100 | *4*	93	100 | *4*	60 | *2 3/8*	50.8	3,000	1	available on demand	*387.055*	available on demand

EAN **2 Deburring Brushes, Cord Wire, Brass Coated Steel Wire**

D mm | *inch*	A mm | *inch*	EB	R mm | *inch*	H mm | *inch*	d Stand.	RPM max.	Pack.	**STL 0.38** | *0.015"* Art.-No.	**STM 0.38** | *0.015"* Art.-No.
250 | *10*	60 | *2 3/8*	58	100 | *4*	50 | *2*	50.8	3,600	1	**377.043**	*377.063*
250 | *10*	60 | *2 3/8*	55	100 | *4*	50 | *2*	100	3,600	1	*377.043.00*	*377.063.00*
250 | *10*	60 | *2 3/8*	53	100 | *4*	50 | *2*	50.8	3,600	1	*377.043.T1*	*377.063.T1*
250 | *10*	60 | *2 3/8*	50	100 | *4*	50 | *2*	100	3,600	1	*377.043.TA*	*377.063.TA*
250 | *10*	80 | *3 1/4*	79	100 | *4*	50 | *2*	50.8	3,600	1	*377.045*	available on demand
250 | *10*	100 | *4*	99	100 | *4*	50 | *2*	50.8	3,600	1	*377.048*	available on demand

All brushes with metal disc and bore 50.8 mm and double keyway 13 x 7 mm!
Further standard bores: 52.9 / 54.5 mm; d min/max: 30 mm ≤ d ≤ R; Deburring Brushes also available with tube 120.

Deburring Brushes

1 2 3 4

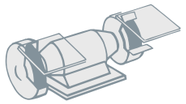

Deburring Brushes, Stainless Steel Wire

D mm | *inch*	A mm | *inch*	EB	R	H	d Stand.	RPM max.	Pack.	1 ROH 0.20 | *0.008"* Art.-No.	1 ROH 0.35 | *0.014"* Art.-No.	1 ROH 0.50 | *0.020"* Art.-No.	2 ROL 0.35 | *0.014"* Art.-No.
250 | *10*	60 | *2 3/8*	58	100	50	50.8	3,600	1	**377.044**	**377.089**	*377.094*	**377.707**
250 | *10*	60 | *2 3/8*	55	100	50	100	3,600	1	*377.044.00*	*377.089.00*	*377.094.00*	*377.707.00*
250 | *10*	60 | *2 3/8*	53	100	50	50.8	3,600	1	*377.044.T1*	*377.089.T1*	*377.094.T1*	*377.707.T1*
250 | *10*	60 | *2 3/8*	50	100	50	100	3,600	1	*377.044.TA*	*377.089.TA*	*377.094.TA*	*377.707.TA*
250 | *10*	80 | *3 1/4*	79	100	50	50.8	3,600	1	*377.047*	*377.090*	*377.097*	available on demand
250 | *10*	100 | *4*	99	100	50	50.8	3,600	1	*377.049*	*377.093*	*377.099*	available on demand
300 | *12*	100 | *4*	95	100	60	50.8	3,000	1	available on demand	available on demand	available on demand	available on demand

All brushes with metal disc and bore 50.8 mm and double keyway 13 x 7 mm!
Further standard bores: 52.9 / 54.5 mm; d min/max: 30 mm ≤ d ≤ R; Deburring Brushes also available with tube 120.

Deburring Brushes, encapsulated

D mm | *inch*	A mm | *inch*	R	H	d Stand.	Pack.	3 STH 0.20 | *0.008"* Art.-No.	3 STH 0.35 | *0.014"* Art.-No.	4 ROH 0.20 | *0.008"* Art.-No.	4 ROH 0.35 | *0.014"* Art.-No.
250 | *10*	13 | *1/2*	100	58	33	1	*370.241.KG*	**370.271.KG**	**370.441.KG**	**370.471.KG**
250 | *10*	20 | *3/4*	100	57	33	1	*370.242.KG*	*370.272. KG*	**370.442.KG**	**370.472.KG**

2 1

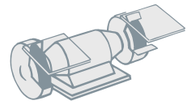

1 Deburring Brushes, Silicon Carbide Bristles

D mm | *inch*	A mm | *inch*	EB	R mm | *inch*	H mm | *inch*	d Stand.	RPM max.	Pack.	SIC 80/1.2 Art.-No.	SIC 120/1.1 Art.-No.	SIC 180/1.0 Art.-No.	SIC 320/0.56 Art.-No.
250 | *10*	60 | *2 3/8*	58	100 | *4*	50 | *2*	50.8	3,600	1	*377.824*	**377.835**	**377.854**	*377.875*
250 | *10*	60 | *2 3/8*	55	100 | *4*	50 | *2*	100	3,600	1	*377.824.00*	*377.835.00*	*377.854.00*	*377.875.00*
250 | *10*	60 | *2 3/8*	53	100 | *4*	50 | *2*	50.8	3,600	1	*377.824.T1*	*377.835.T1*	*377.854.T1*	*377.875.T1*
250 | *10*	60 | *2 3/8*	50	100 | *4*	50 | *2*	100	3,600	1	*377.824.TA*	*377.835.TA*	*377.854.TA*	*377.875.TA*
250 | *10*	80 | *3 1/4*	79	100 | *4*	50 | *2*	50.8	3,600	1	available on demand	*377.837*	available on demand	available on demand
250 | *10*	100 | *4*	99	100 | *4*	50 | *2*	50.8	3,600	1	available on demand	*377.839*	available on demand	available on demand
300 | *12*	60 | *2 3/8*	55	100 | *4*	60 | *2 3/8*	50.8	3,000	1	*387.824*	available on demand	available on demand	available on demand
300 | *12*	100 | *4*	95	100 | *4*	60 | *2 3/8*	50.8	3,000	1	available on demand	available on demand	available on demand	available on demand

2 Deburring Brushes, mixed filament

D mm | *inch*	A mm | *inch*	EB	R mm | *inch*	H mm | *inch*	d Stand.	RPM max.	Pack.	ROF 0.20 - SIC 120 Mixed filament with mixing proportion 1:1 Art.-No.
250 | *10*	60 | *2 3/8*	58	100 | *4*	50 | *2*	50.8	3,600	1	*377.091*
250 | *10*	60 | *2 3/8*	55	100 | *4*	50 | *2*	100	3,600	1	*377.091.00*

All brushes with metal disc and bore 50.8 mm and double keyway 13 x 7 mm!
Further standard bores: 52.9 / 54.5 mm; d min/max: 30 mm ≤ d ≤ R; Deburring Brushes also available with tube 120.

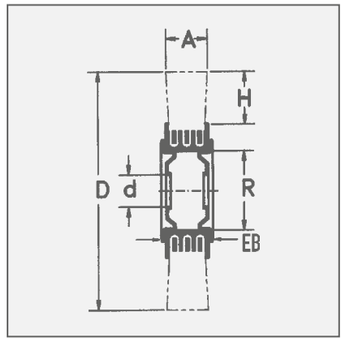

Item Nos. in bold are available ex stock.
Consider our minimum order value for *italic printed* article numbers (see page 148).

STH = steel wire, high tensile, crimped
ROL = stainless steel, cord wire
ROF = stainless steel wire, crimped
SIC = silicon carbide bristles

Roller Brushes

Roller Brushes
Roller Brushes for the use in deburring machines. For Deburring e.g. cutting edges of tubes.
As filling material you can choose from steel and stainless steel wire, brass coated steel wire or cord wire. These brushes feature with their dense filling.

Roller Brushes
Deburring brushes are available with
D = 250 - 400 mm and
A = 55 - 700 mm

In your inquiry please indicate measure D, A and the bore e. g. 50.8 mm, 52.9 mm or 54.5 mm with double keyway 13 x 7 mm. Other bores up to 120 mm are available on demand.

Moreover we offer with our welded metal plate special collets for the roller brushes. Bores and keyways will be produced customized.

Note: Due to our advanced manufacturing technology it is possible to produce balanced roller brushes without balancing weights. Hence the brush has a steady run throughout its whole lifetime.

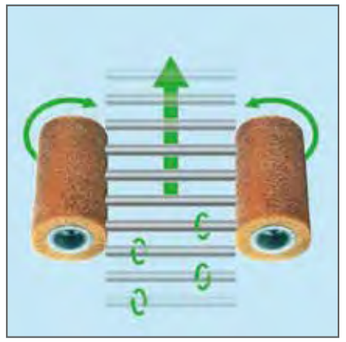

Function chart of a deburring machine with roller brushes

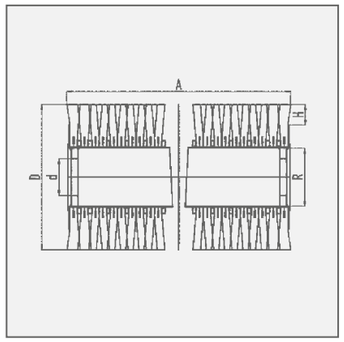

Item Nos. in bold are available ex stock.
Consider our minimum order value for *italic printed* article numbers (see page 148).

STH	= steel wire, high tensile, straight
STL	= cord wire, crimped
ROH	= stainless steel wire, high tensile, crimped
SIC	= silicon carbide bristles

Strip brushes for deburring machines you find on pages 142 - 143.

Roller Brushes, Steel Wire

D	A	R	H	d	RPM	Pack.	**STH 0.20** | *0.008"*	**STH 0.35** | *0.014"*	**STH 0.50** | *0.020"*	**STL 0.38** | *0.015"*
mm | *inch*	mm | *inch*	mm | *inch*	mm | *inch*	Stand.	max.		Art.-No.	Art.-No.	Art.-No.	Art.-No.
250 | *10*	300 | *12*	100 | *4*	50 | *2*	100	3,600	1	*377.240.30*	*377.270.30*	*377.290.30*	*377.780.30*
250 | *10*	460 | *18*	100 | *4*	50 | *2*	100	3,600	1	*377.240.46*	*377.270.46*	*377.290.46*	*377.780.46*
250 | *10*	600 | *24*	100 | *4*	50 | *2*	100	3,600	1	*377.240.60*	*377.270.60*	*377.290.60*	*377.780.60*
300 | *12*	460 | *18*	100 | *4*	60 | *2 3/8*	100	3,000	1	*387.240.46*	*387.270.46*	*387.290.46*	*387.780.46*
300 | *12*	460 | *18*	120 | *4 3/4*	50 | *2*	120	3,000	1	*388.240.46*	*388.270.46*	*388.290.46*	*388.780.46*
300 | *12*	600 | *24*	120 | *4 3/4*	50 | *2*	120	3,000	1	*388.240.60*	*388.270.60*	*388.290.60*	*388.780.60*

Roller Brushes, Stainless Steel, Abrasive Bristles

D	A	R	H	d	RPM	Pack.	**ROH 0.20** | *0.008"*	**ROH 0.35** | *0.014"*	**ROH 0.50** | *0.020"*	**SIC 120 / 1.1**
mm | *inch*	mm | *inch*	mm | *inch*	mm | *inch*	Stand.	max.		Art.-No.	Art.-No.	Art.-No.	Art.-No.
250 | *10*	300 | *12*	100 | *4*	50 | *2*	100	3,600	1	*377.440.30*	*377.470.30*	*377.490.30*	*377.830.30*
250 | *10*	460 | *18*	100 | *4*	50 | *2*	100	3,600	1	*377.440.46*	*377.470.46*	*377.490.46*	*377.830.46*
250 | *10*	600 | *24*	100 | *4*	50 | *2*	100	3,600	1	*377.440.60*	*377.470.60*	*377.490.60*	*377.830.60*
300 | *12*	460 | *18*	100 | *4*	60 | *2 3/8*	100	3,000	1	*387.440.46*	*387.470.46*	*387.490.46*	*387.830.46*
300 | *12*	460 | *18*	120 | *4 3/4*	50 | *2*	120	3,000	1	*388.440.46*	*388.470.46*	*388.490.46*	*388.830.46*
300 | *12*	600 | *24*	120 | *4 3/4*	50 | *2*	120	3,000	1	*388.440.60*	*388.470.60*	*388.490.60*	*388.830.60*

Other measurements and filling materials as well as collets in special measurements are available on request.

Deburring End Brushes

Deburring End Brushes
These brushes are perfect for deburring tubes, profiles or even plane surfaces. Deburring end brushes are used in a set of 8, 16 or 24 single end brushes integrated in one deburring device.

The metal bush fits all standard collets.

Stainless Steel
Information on working on stainless steel material you find at. www.lessmann.com

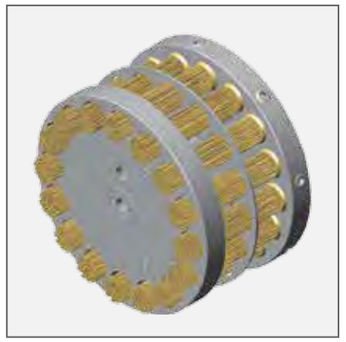

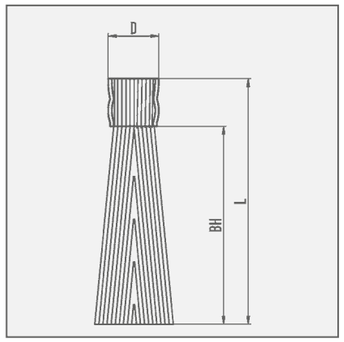

Item Nos. in bold are available ex stock.
Consider our minimum order value for *italic printed* article numbers (see page 148).

STH = steel wire, high tensile, straight
STL = cord wire, crimped
ROH = stainless steel wire, high tensile, crimped
SIC = silicon carbide bristles

1 Deburring End Brushes, Steel Wire

D mm | *inch*	L mm | *inch*	BH mm | *inch*	Pack.	**STH 0.20** | *0.008"* Art.-No.	**STH 0.35** | *0.014"* Art.-No.	**STH 0.50** | *0.020"* Art.-No.
25 | *1*	120 | *4 3/4*	95 | *3 1/2*	16	**048.241**	**048.271**	**048.291**

2 Deburring End Brushes, CordWire

D mm | *inch*	L mm | *inch*	BH mm | *inch*	Pack.	**STL 0.35** | *0.014"* Art.-No.	**STL 0.38** | *0.015"* Art.-No.
25 | *1*	120 | *4 3/4*	95 | *3 1/2*	16	**048.701**	*048.081*

3 Deburring End Brushes, Stainless Steel Wire

D mm | *inch*	L mm | *inch*	BH mm | *inch*	Pack.	**ROH 0.20** | *0.008"* Art.-No.	**ROH 0.35** | *0.014"* Art.-No.	**ROH 0.50** | *0.020"* Art.-No.
25 | *1*	120 | *4 3/4*	95 | *3 1/2*	16	**048.441**	**048.471**	**048.491**

Deburring End Brushes, Silicon Carbide Bristles, mixed wire

				4			5
D mm | *inch*	L mm | *inch*	BH mm | *inch*	Pack.	**SIC 80 / 1.2** Art.-No.	**SIC 120 / 1.1** Art.-No.	**SIC 180 / 1.0** Art.-No.	**SIC 120 / 1.1 - ROH 0.20** Art.-No.
25 | *1*	120 | *4 3/4*	95 | *3 1/2*	16	**048.821**	**048.841**	**048.851**	**048.901***
25 | *1*	120 | *4 3/4*	95 | *3 1/2*	16				**048.941****

* Mixing proportion 1:1 | ** Mixing proportion 2:1

Brush Adapter for deburring end brushes

Suitable for all common deburring machines	Art.-No
Device for 8 End Brushes	available on demand
Device for 16 End Brushes	*048.999*
Device for 24 End Brushes	*048.998*

LESSMANN®
THE GERMAN BRUSH COMPANY

CUP AND BEVEL BRUSHES

Cup Brushes

Cup Brushes
Knot cup brushes are for heavy duty use: for the preparing of metal surfaces before painting, the removal of slag, rust, scale or concrete waste.
The brushes diameter 80/100/125 mm (Art. No. 484/486/487) have a **bridle** fitted for stability. The bridle can be removed after wear of the wire exposing a further 20 mm of useable wire!

We recommend the use of our brush with diameter 90 mm for small angle grinders. Compared to the common brush with diameter 65 mm this model has 50% more wire and it is really something special in the brush market!

Knot Cup Brushes with extra long filling
For the use on large areas and for a flexible cleaning and derusting of e.g. shipyards. For a use in angle grinders. Easy working also in areas which are hard to reach.

Cup Brushes, left-right knotted
Left-right knotted cup brushes usually are more aggressive, hence they are often used for heavy brushing operations.
Besides the knots open less, therefore they are ideal for the treatment of edges.

Cup Brushes
Cup brushes with crimped wire are ideal for working on large surfaces with angle grinders. They can also be used for the removal of rust, paint, dirt or scale and for polishing.

Special Designs
The cup brushes can be delivered with different filling materials according to your requirements e. g. brushes with brass cups and brass wire for non-sparkling applications.

For promoting sales all standard wheel brushes are packed individually for self display. They are also available in bulk.

Stainless Steel Brushes
LESSMANN brushes with stainless steel wire have green cups. More information for brush applications on stainless materials you will find at www.lessmann.com

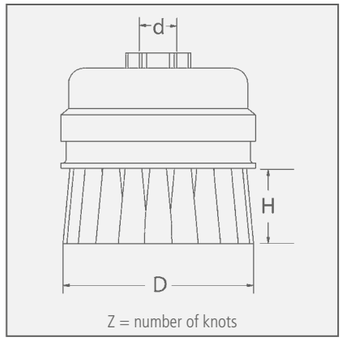

Chunky packaging
Many articles you receive as standard in handy covering boxes (10 pieces per carton).

Item Nos. in bold are available ex stock.
Consider our minimum order value for *italic printed* article numbers (see page 148).

STH = steel wire, high tensile, straight
STM = brass coated steel, straight

EAN

Knot Cup Brushes without Bridle, 1 Row, Steel Wire, Brass coated Steel Wire

	D mm | *inch*	d	H mm | *inch*	Z	RPM max.	Pack.	STH 0.35 | *0.014"* Art.-No.	STH 0.50 | *0.020"* Art.-No.	STH 0.80 | *0.031"* Art.-No.	5 STM 0.35 | *0.014"* Art.-No.	5 STM 0.50 | *0.020"* Art.-No.
1	65 | *2 1/2*	M 10 x 1.5	20 | *3/4*	18	12,500	1	**482.114***	**482.214***	available on demand		
1	65 | *2 1/2*	M 14 x 2.0	20 | *3/4*	18	12,500	1	**482.117***	**482.217***	**482.317***	**482.117.SM***	**482.217.SM***
1	75 | *3*	M 14 x 2.0	23 | *7/8*	20	12,500	1	**483.117***	**483.217***	*483.317*		
1	90 | *3 1/2*	M 14 x 2.0	22 | *7/8*	20	11,500	1	*485.137**	**485.237***	*485.337*		**485.237.SM***
1	100 | *4*	M 14 x 2.0	25 | *1*	26	9,000	1	available on demand	**486.237***	available on demand		
1	125 | *5*	M 14 x 2.0	25 | *1*	32	7,000	1	available on demand	**487.237**	available on demand		
1	150 | *6*	M 14 x 2.0	30 | *1 1/4*	36	6,600	1	available on demand	**488.237**	available on demand		
1	150 | *6*	W5/8x11NC	30 | *1 1/4*	36	6,600	1	available on demand	*488.238*	available on demand		
2	65 | *2 1/2*	M 14 x 2.0	20 | *3/4*	18	12,500	1	available on demand	**482.217.WZ***			

EAN

3 Knot Cup Brushes, without Bridle, 1 Row, Steel Wire, with extra long filling

D mm | *inch*	d	H mm | *inch*	Z	RPM max.	Pack.	STH 0.35 | *0.014"* Art.-No.	STH 0.50 | *0.020"* Art.-No.
80 | *3 1/4*	M 14 x 2.0	33 | *1 1/4*	18	12,500	25	**480.117**	*480.217*

EAN

4 Knot Cup Brushes without Bridle, 2 Rows, Steel Wire

D mm | *inch*	d	H mm | *inch*	Z	RPM max.	Pack.	STH 0.35 | *0.014"* Art.-No.	STH 0.50 | *0.020"* Art.-No.	STH 0.80 | *0.031"* Art.-No.
100 | *4*	W 5/8 x 11 NC	25 | *1*	26+20	9,000	1	*486.148*	*486.248*	*486.348*
125 | *5*	W 5/8 x 11 NC	25 | *1*	32+26	7,000	1	available on demand	*487.248*	available on demand
150 | *6*	W 5/8 x 11 NC	25 | *1*	36+32	6,600	1	available on demand	*488.248*	available on demand

* Packed 10 pieces per carton

Cup Brushes

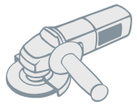

Knot Cup Brushes with Bridle, 1 Row, Steel Wire

D mm | *inch*	d mm | *inch*	H mm | *inch*	H_1 mm | *inch*	Z	Pack.	**STH 0.35** | *0.014"* Art.-No.	**STH 0.50** | *0.020"* Art.-No.	**STH 0.80** | *0.031"* Art.-No.
80 | *3 1/4*	22.2 | *7/8*	25 | *1*	15 | *5/8*	20	1	*484.111*	*484.211**	**484.311***
80 | *3 1/4*	M 14 x 2.0	25 | *1*	15 | *5/8*	20	1	**484.117***	**484.217***	**484.317***
80 | *3 1/4*	W 5/8 x 11 NC	25 | *1*	15 | *5/8*	20	1	*484.118*	**484.218**	*484.318*
100 | *4*	22.2 | *7/8*	23 | *7/8*	12 | *1/2*	26	1	**486.111**	**486.211***	**486.311***
100 | *4*	M 14 x 2.0	23 | *7/8*	12 | *1/2*	26	1	**486.117***	**486.217***	**486.317***
100 | *4*	W 5/8 x 11 NC	23 | *7/8*	12 | *1/2*	26	1	*486.118*	**486.218***	*486.318**
125 | *5*	22.2 | *7/8*	23 | *7/8*	15 | *5/8*	32	1	*487.111*	**487.211**	**487.311**
125 | *5*	M 14 x 2.0	23 | *7/8*	15 | *5/8*	32	1	**487.117**	**487.217**	**487.317**
125 | *5*	W 5/8 x 11 NC	23 | *7/8*	15 | *5/8*	32	1	*487.118*	**487.218**	*487.318*

* Packed 10 pieces per carton.
After removing the bridle there is the following further trimming length (see measure H1).

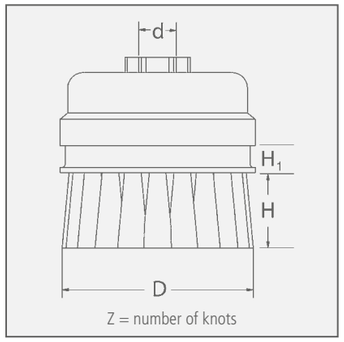

Item Nos. in bold are available ex stock.
Consider our minimum order value for *italic printed* article numbers (see page 148).

STH = steel wire, high tensile, straight

ROH = stainless steel wire, high tensile, straight

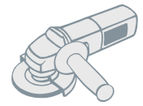

Knot Cup Brushes without Bridle, 1 Row, Stainless Steel Wire

	D mm | *inch*	d	H mm | *inch*	Z	RPM max.	Pack.	**ROH 0.35** | *0.014"* Art.-No.	**ROH 0.50** | *0.020"* Art.-No.
1	65 | *2 1/2*	M 10 x 1.5	20 | *3/4*	18	12,500	1	*482.714*	*482.814**
1	65 | *2 1/2*	M 14 x 2.0	20 | *3/4*	18	12,500	1	**482.717***	**482.817***
1	75 | *3*	M 14 x 2.0	20 | *3/4*	20	12,500	1	available on demand	*483.817**
1	80 | *3 1/4*	M 14 x 2.0	33 | *1 1/4*	18	15,500	25	**480.717**	available on demand
2	65 | *2 1/2*	M 14 x 2.0	20 | *3/4*	18	12,500	1	available on demand	**482.817.WZ***

3 Knot Cup Brushes with Bridle, 1 Row, Stainless Steel Wire

D mm | *inch*	d mm | *inch*	H mm | *inch*	H_1 mm | *inch*	Z	RPM max.	Pack.	**ROH 0.35** | *0.014"* Art.-No.	**ROH 0.50** | *0.020"* Art.-No.
80 | *3 1/4*	22.2 | *7/8*	25 | *1*	15 | *5/8*	20	9,000	1	*484.711*	*484.811*
80 | *3 1/4*	M 14 x 2.0	25 | *1*	15 | *5/8*	20	9,000	1	**484.717**	**484.817***
80 | *3 1/4*	W 5/8 x 11 NC	25 | *1*	15 | *5/8*	20	9,000	1	*484.718*	*484.818*
100 | *4*	22.2 | *7/8*	23 | *7/8*	12 | *1/2*	26	9,000	1	*486.711*	*486.811*
100 | *4*	M 14 x 2.0	23 | *7/8*	12 | *1/2*	26	9,000	1	**486.717***	**486.817***
100 | *4*	W 5/8 x 11 NC	23 | *7/8*	12 | *1/2*	26	9,000	1	*486.718*	*486.818*
125 | *5*	M 14 x 2.0	23 | *7/8*	15 | *5/8*	32	9,000	1	available on demand	*487.817*

* Packed 10 pieces per carton

Cup Brushes

Cup Brushes with Crimped Wire

D mm | *inch*	d mm | *inch*	H	RPM max.	Pack.	1 STA 0.20 | *0.008"* Art.-No.	1 STA 0.35 | *0.014"* Art.-No.	1 STA 0.50 | *0.020"* Art.-No.	2 ROH 0.30/0.35 | *0.012"* Art.-No.	3 MES 0.30 | *0.012"* Art.-No.
65 | *2 3/8*	M 10 x 1,5	20	12,000	1		**421.164***		*421.364*	*421.564*
65 | *2 3/8*	M 14 x 2.0	20	12,000	1	**421.147**	**421.167***	**421.197**	**421.367***	**421.567***
75 | *3*	M 14 x 2.0	22	12,500	1		**423.167***	available on demand	**423.367***	available on demand
75 | *3*	W 5/8 x 11 NC	22	12,500	1		**423.168***	available on demand	*423.368*	available on demand
80 | *3 1/4*	22.2 | *7/8*	25	8,500	1		**424.171***	available on demand	*424.361*	available on demand
80 | *3 1/4*	M 14 x 2.0	25	8,500	1	**424.147**	**424.177***	**424.197**	**424.367***	**424.567**
80 | *3 1/4*	W 5/8 x 11 NC	25	8,500	1		*424.178*	*424.198*	*424.368*	available on demand
100 | *4*	22.2 | *7/8*	30	9,000	1		**426.171***	*426.191*	*426.361*	*426.561*
100 | *4*	M 14 x 2.0	30	9,000	1	**426.147***	**426.177***	**426.197***	**426.367***	**426.567**
100 | *4*	W 5/8 x 11 NC	30	9,000	1		**426.178***	*426.198*	*426.368*	*426.568*
125 | *5*	22.2 | *7/8*	30	8,000	1		**427.171**	available on demand	available on demand	available on demand
125 | *5*	M 14 x 2.0	30	8,000	1	**427.147**	**427.177**	**427.297**	**427.367***	**427.567***
125 | *5*	W 5/8 x 11 NC	30	8,000	1		**427.178**	*427.298*		
150 | *6*	22.2 | *7/8*	40	6,500	1		**429.171**	*429.191*		
150 | *6*	M 14 x 2.0	40	6,500	1		**429.177**	**429.197**	*429.367*	
150 | *6*	W 5/8 x 11 NC	40	6,500	1		**429.178**	*429.198*		

Cup Brushes, Brass Coated Steel Wire, Abrasive Filament

D mm | *inch*	d	H	RPM max.	Pack.	STL 0.35 | *0.014"* Art.-No.	STM 0.30 | *0.012"* Art.-No.	4 SIC 80/1.2 Art.-No.	4 SIC 180/0.9 Art.-No.
65 | *2 3/8*	M 14 x 2.0	20	12,000	1		**421.767**	**421.827**	*421.857*
100 | *4*	22.2 | *7/8*	30	9,000	1	*426.701*			
100 | *4*	M 14 x 2.0	30	9,000	1	*426.707*	**426.767**		

* Packed 10 pieces per carton

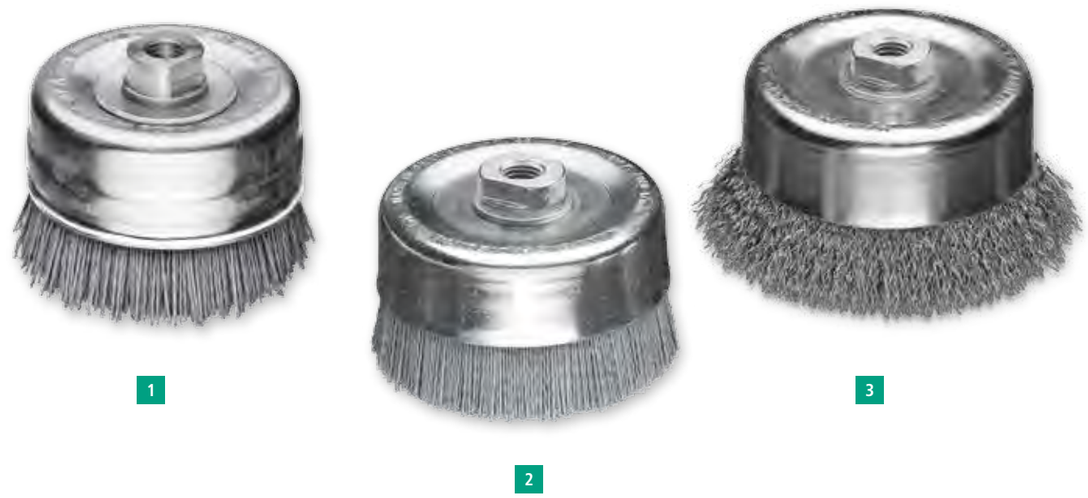

Cup Brushes, Straight Filament

	D mm | *inch*	d mm | *inch*	H	RPM max.	Pack.	STH 0.35 | *0.014"* Art.-No.	STM 0.35 | *0.014"* Art.-No.	STL 0.35 Art.-No.	SIC 80/1.2 Art.-No.	SIC K180/1.0 Art.-No.
1	90 | *3 1/2*	M 14	25	9,000	1				**446.827***	***446.857****
1	90 | *3 1/2*	22.2 | *7/8*	25	9,000	1				available on demand	*446.851**
3	100 | *4*	M 14	30	9,000	1	*446.277**	*446.777**			
3	100 | *4*	22.2 | *7/8*	30	9,000	1	*446.271**	*446.771**	**446.701***		
2	110 | *4 1/2*	M 14	30	7,000	1				**447.827***	**447.857***
3	125 | *5*	M 14	30	7,000	1	**447.277***	available on demand	*447.707*		

1 with bridle | * Packed 10 pieces per carton

Cup Brushes with Straight Wire
They are used for deburring surfaces, mostly in machining centers. The brushes are available with steel wire, stainless steel wire, abrasive nylon or any other filament. Due to the straight cup the filament of the brush is less flaring out and more cone points of the bristles work on the surface. Please contact us for more information!

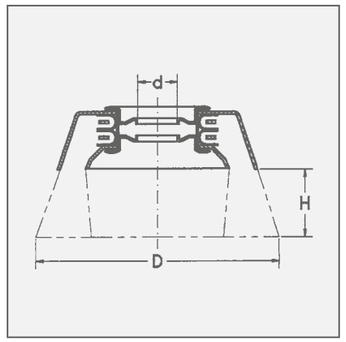

Item Nos. in bold are available ex stock.
Consider our minimum order value for *italic printed* article numbers (see page 148).

STA = steel wire, crimped
STH = steel wire, high tensile, straight
STM = brass coated steel, crimped
STL = cord wire, crimped
ROH = stainless steel wire, high tensile, straight
MES = brass wire, crimped
SIC = silicon carbide bristles

Bevel Brushes

Bevel Brushes
The special shape of these brushes enables the user to work in hard to reach places. The knots are left hand twisted to increase stability. For promoting sales all standard knot bevel brushes are packed individually for self display. These brushes are also available bulk packed.

Wheel Brushes with thread
Like bevel brushes, wheel brushes with a thread are ideal for working in areas which are hard to reach. Usually the brushes are used on angle grinders.

Other measurements and filling materials are available on request.

Stainless Steel Brushes
LESSMANN brushes with stainless steel wire have green cups. We use wire with material number 1.4310. Material number 1.4401 can be used on request.
More information for brush applications on stainless materials you will find at www.lessmann.com

Bevel Brushes, left-right knotted
Left-right knotted bevel brushes usually are more aggressive, hence they are often used for heavy brushing operations.
Besides the knots open less, therefore there are ideal for the treatment of edges.

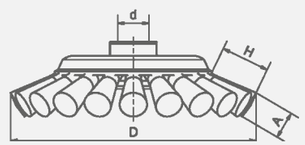

Z = number of knots

Item Nos. in bold are available ex stock.
Consider our minimum order value for *italic printed* article numbers (see page 148).

STA	= steel wire, crimped
STM	= brass coated steel wire
STH	= steel wire, high tensile, straight
ROF	= stainless steel wire, crimped
ROH	= stainless steel wire, high tensile, straight

Knot Bevel Brushes, Steel Wire, Stainless Steel Wire

D mm | *inch*	A mm | *inch*	d mm | *inch*	H	Z	RPM max.	Pack.	1 STH 0.35 | *0.014"* Art.-No.	1 STH 0.50 | *0.020"* Art.-No.	2 ROH 0.35 | *0.014"* Art.-No.	2 ROH 0.50 | *0.020"* Art.-No.
100 | *4*	12 | *1/2*	M 10 x 1.5	20	18	15,000	1		**471.254**		
100 | *4*	12 | *1/2*	M 14 x 2.0	20	18	15,000	1	**471.157***	**471.257***	**471.757***	**471.857***
100 | *4*	12 | *1/2*	22.2 | *7/8*	20	18	15,000	1		**471.251**		
115 | *4 1/2*	12 | *1/2*	M 14 x 2.0	24	20	15,000	1	**472.157***	**472.257***	**472.757***	**472.857***
115 | *4 1/2*	12 | *1/2*	22.2 | *7/8*	24	20	15,000	1		**472.251**		
115 | *4 1/2*	12 | *1/2*	M 14 x 2.0	24	24	15,000	1		**472.257.V4***		
125 | *5*	12 | *1/2*	M 14 x 2.0	29	20	15,000	1		**473.257***		*473.857*
3 115 | *4 1/2*	12 | *1/2*	M 14 x 2.0	24	20	15,000	1		**472.257.WZ***		**472.857.WZ***

4 Knot Bevel Brushes, Steel Wire, Brass coated steel wire

D mm | *inch*	A mm | *inch*	d mm | *inch*	H	Z	RPM max.	Pack.	STM 0.35 | *0.014"* Art.-No.	STM 0.50 | *0.020"* Art.-No.
100 | *4*	12 | *1/2*	M 14 x 2.0	20	18	15,000	1	**471.157.SM***	
115 | *4 1/2*	12 | *1/2*	M 14 x 2.0	24	20	15,000	1		**472.257.SM***

Bevel Brushes, Crimped Wire

D mm | *inch*	A mm | *inch*	d	H	RPM max.	Pack.	5 STA 0.35 | *0.014"* Art.-No.	6 ROF 0.30 | *0.012"* Art.-No.	6 STM 0.30 | *0.012"* Art.-No.
100 | *4*	10 | *3/8*	M 14 x 2.0	20	15,000	1	**422.177***	**422.367***	**422.767**

7 Wheel Brushes, crimped wire, with thread

D mm | *inch*	A mm | *inch*	d	H	RPM max.	Pack.	ROF 0.30 | *0.012"* Art.-No.	STM 0.30 | *0.012"* Art.-No.
115 | *4 1/2*	12 | *1/2*	M 14	24	12,500	1	*304.361.14*	**304.761.14**
125 | *5*	13 | *1/2*	M 14	19.5	12,500	1	**335.361.14**	**335.761.14**

* Packed 10 pieces per carton

Brushes for grass trimmers

Brushes for grass trimmers
Knotted brushes on grass trimmers are ideal for removing weeds on grass pavers, curbstones, cobbled areas or other spots which are hard to reach. Those brushes clean larger areas like courtyards, terraces or longer alleys effortless and sustainable.

Besides, brushes are ecologically friendly and they remove weeds fast and effectively.

Attention: When working with brushes on grass trimmers, please be aware of stringent safety rules. Please take note of the data sheet we attach the brushes or have a look at www.lessmann.com.

Right adaption of the brush

Wheel Brushes

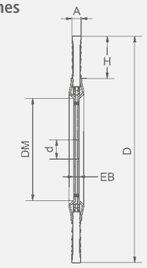

ZF = Knot type
Z = number of knots, R = number of rows

Bevel Brushes

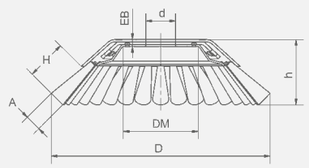

Item Nos. in bold are available ex stock.
Consider our minimum order value for *italic printed* article numbers (see page 148).

STM = brass coated steel, straight
STH = steel wire, high tensile, straight

EAN

Knotted Wheel Brushes, for grass trimmers

	D mm | *inch*	A mm | *inch*	EB	DM	H mm | *inch*	Z	d mm | *inch*	ZF	RPM max.	Pack.	**STH 0.50** | *0.020"* Art.-No.
1	175 | *6 7/8*	6 | *1/4*	8	68	34 | *1 1/4*	40	20 | *3/4*	B	12,500	1	**475.260.01**
1	175 | *6 7/8*	6 | *1/4*	6	68	34 | *1 1/4*	40	25.4 | *1*	B	12,500	1	**475.261.01**
1	200 | *8*	6 | *1/4*	8	68	46 | *1 49/64*	40	20 | *3/4*	B	12,500	1	**476.260.01**
1	200 | *8*	6 | *1/4*	6	68	46 | *1 49/64*	40	25.4 | *1*	B	12,500	1	**476.261.01**
2	250 | *10*	6 | *1/4*	3	83	42 | *1 5/8*	56	20 | *3/4*	B	10,000	1	**477.260.01**
2	250 | *10*	6 | *1/4*	3	83	42 | *1 5/8*	56	25.4 | *1*	B	10,000	1	**477.261.01**
2	300 | *12*	6 | *1/4*	3	83	67 | *2 5/8*	56	20 | *3/4*	B	10,000	1	**478.260.01**

EAN

Knotted Bevel Brushes, for grass trimmers

	D mm | *inch*	A mm | *inch*	EB	DM	H mm | *inch*	h	Z	d mm | *inch*	ZF	RPM max.	Pack.	**STH 0.50** | *0.020"* Art.-No.	**STM 0.50** | *0.020"* Art.-No.
3	170 | *6 3/4*	12 | *1/2*	6	50	50 | *2*	58	32	20 | *3/4*	B	10,000	1	**475.250.01**	
3	170 | *6 3/4*	12 | *1/2*	6	50	50 | *2*	58	32	25.4 | *1*	B	10,000	1	**475.251.01**	
4	200 | *8*	14 | *9/16*	6	64	37 | *1 1/2*	55	36	20 | *3/4*	B	10,000	1	**476.250.01**	**476.250.SM**
4	200 | *8*	14 | *9/16*	6	64	37 | *1 1/2*	55	36	25.4 | *1*	B	10,000	1	**476.251.01**	**476.251.SM**

The brushes are suitable for all common grass trimmer and brush cutter models. Possible special diameters or special bores are deliverable on demand.

LESSMANN®
THE GERMAN BRUSH COMPANY

BRUSHES WITH SHANK

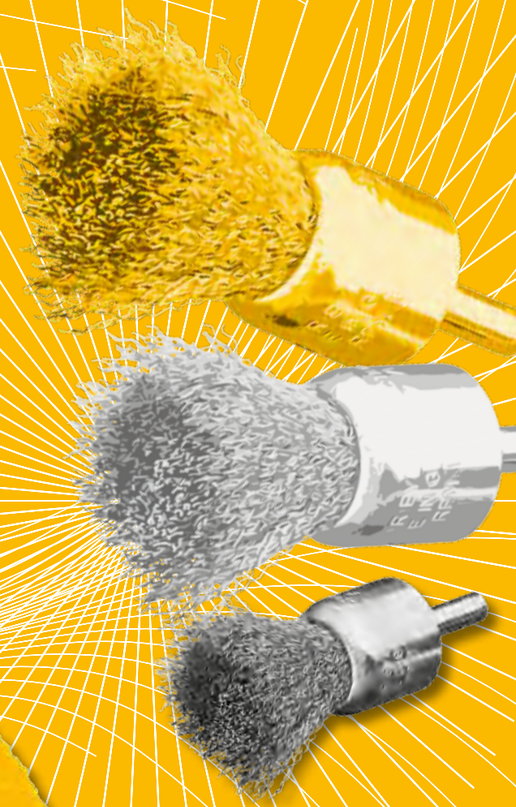

Wheel Brushes with Shank

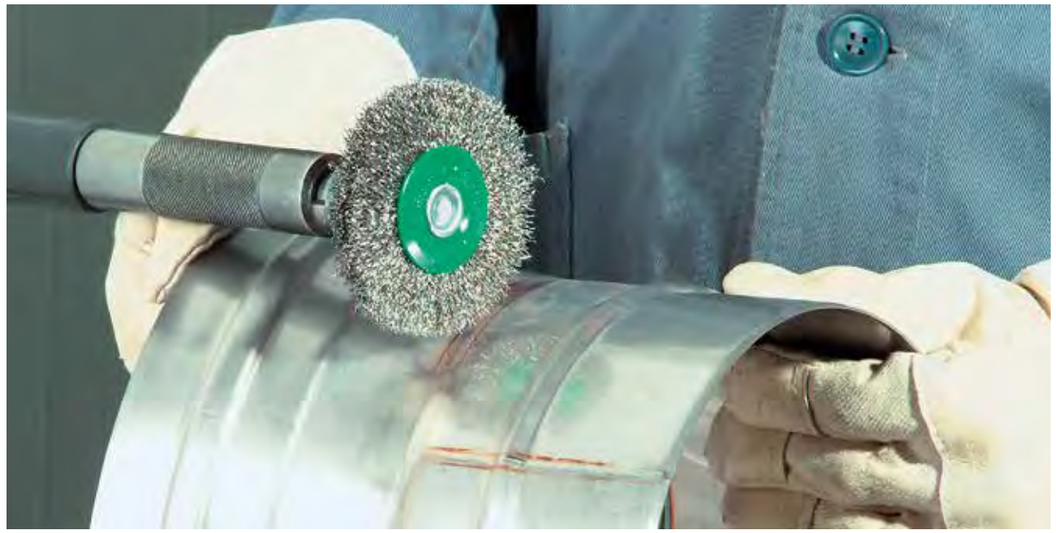

Wheel Brushes with Shank
The wheel brushes shown on these pages are manufactured with a mounted shank for professional use. Tight filling wire and balanced running make these brushes excellent tools.

Knotted Wheel Brushes with Shank
It does not matter if the brush has one or two rows, the brush is the prefect tool for removing underseal, rust deburring, roughening etc. For working in narrow places we recommend our brush 417.198.11, which is an especially narrow Brush.

Encapsulated Brushes
By embedding in tough plastic the filling width always remains the same and early break of the wires can be prevented. It's the perfect tool for long lasting and safe working. The colour on the picture can differ from the colour on the brush.

Wheel brushes with shank completely stainless steel
All the inner and outer parts of these brushes such as shanks, side plates, rings, etc. are made of stainless steel. Therefore these brushes are the perfect tool for working in damp and difficult places. These brushes do not have green side plates.

Structuring Brushes with Shank
These brushes are special brushes which can be used for wood grain surfaces.

Shank Brushes with Silicon Carbide Bristles
The high quality bristles with silicon carbide can be used for deburring, polishing and structuring of stainless steel, aluminium and plastic surfaces. Besides the articles mentioned on this page we can also supply other grits, diameters and widths.

Stainless Steel Brushes
LESSMANN brushes with stainless steel wire have green site plates. We use wire with material number 1.4310. Material number 1.4401. can be used on request.
More information for brush applications on stainless materials you will find at www.lessmann.com

The brushes have a 6 mm shank. On demand the brushes can also be supplied with 1/4" shanks (USA execution).

Brushes with other diameters, filling widths and filling material are available on request.

1 2 3

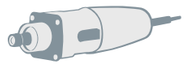

Knot Wheel Brushes with Shank Ø 6 mm

	D mm | *inch*	A mm | *inch*	H mm | *inch*	Z	R	RPM max.	Pack.	**STH 0.35** | *0.014"* Art.-No.	**STH 0.50** | *0.020"* Art.-No.	**ROH 0.50** | *0.020"* Art.-No.
1	75 | *3*	9 | *3/8*	15 | *5/8*	18	1	25,000	10		**417.198.11**	
	75 | *3*	12 | *1/2*	15 | *5/8*	18	1	25,000	10	**417.168**	**417.198**	**417.398**
2	75 | *3*	16 | *5/8*	15 | *5/8*	18	2	25,000	10		**417.199**	**417.399**

Wheel Brushes with Shank Ø 6 mm, Encapsulated

	D mm | *inch*	A mm | *inch*	H mm | *inch*	RPM max.	Pack.	**STA 0.30** | *0.012"* Art.-No.
3	50 | *2*	8 | *5/16*	13 | *1/2*	15,000	10	**415.160**
	60 | *2 3/8*	8 | *5/16*	18 | *3/4*	15,000	10	**416.160**
	76 | *3*	8 | *5/16*	23 | *7/8*	15,000	10	**417.160**

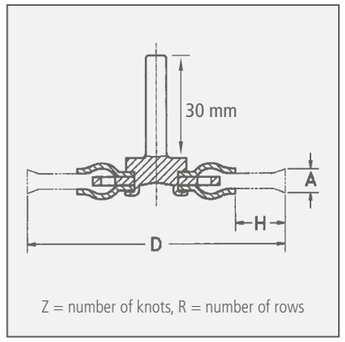

Item Nos. in bold are available ex stock.
Consider our minimum order value for *italic printed* article numbers (see page 148).

STA = steel wire, crimped
STH = steel wire, high tensile, straight
ROH = stainless steel wire, high tensile

Wheel Brushes with Shank

Wheel Brushes with Shank Ø 6 mm

D mm | *inch*	A	H	RPM max.	Pack.	1 | 2 STA 0.15 | *0.006"* Art.-No.	STA 0.20 | *0.008"* Art.-No.	STA 0.30 | *0.012"* Art.-No.	STA 0.50 | *0.020"* Art.-No.	3 STM 0.25 | *0.010"* Art.-No.
20 | *3/4*	6	3	20,000	10	*411.132*	**411.142**			
30 | *1 1/4*	6	6	20,000	10	**413.132**	**413.142**	**413.162**		
30 | *1 1/4*	9	6	20,000	10	*413.133*	**413.143**	**413.163**		
40 | *1 3/8*	8	9	18,000	10	**414.132**	**414.142**	**414.162**	**414.192**	*414.752*
40 | *1 3/8*	11	9	18,000	10	*414.133*	**414.143**	**414.163**	*414.193*	available on demand
50 | *2*	10	12	15,000	10	*415.132*	**415.142**	**415.162**	**415.192**	**415.752**
50 | *2*	14	12	15,000	10	**415.133**	**415.143**	**415.163**	*415.193*	available on demand
60 | *2 3/8*	10	17	15,000	10	*416.132*	**416.142**	**416.162**	available on demand	*416.752*
60 | *2 3/8*	14	17	15,000	10	**416.133**	**416.143**	**416.163**	*416.193*	available on demand
70 | *2 3/4*	12	19	15,000	10	*417.132*	**417.142**	**417.162**	**417.192**	**417.752**
70 | *2 3/4*	16	19	15,000	10	**417.133**	**417.143**	**417.163**	available on demand	available on demand
80 | *3 1/4*	12	20	15,000	10	available on demand	**418.142**	**418.162**	*418.192*	*418.752*
80 | *3 1/4*	18	20	15,000	10	available on demand	**418.143**	**418.163**	available on demand	available on demand
70 | *2 3/4*	10	14	15,000	10				**417.196***	

Structuring Brushes with Shank Ø 8 mm

D mm | *inch*	A	H	RPM max.	Pack.	4 STM 0.25 | *0.010"* Art.-No.	SIC 80/1.4 Art.-No.
80 | *3 1/4*	35	28	4,000	1	**418.704**	*418.803*

* larger plates

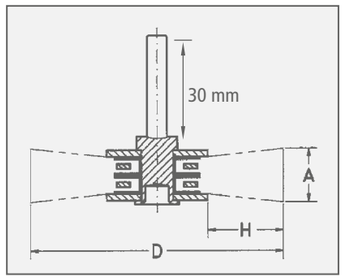

Item Nos. in bold are available ex stock.
Consider our minimum order value for *italic printed* article numbers (see page 148).

STA	= steel wire, crimped
STM	= brass coated steel, crimped
ROF	= stainless steel wire, crimped
RO4	= stainless steel wire, straight, 1.4401
MES	= brass wire, crimped
SIC	= silicon carbide bristles

Wheel Brushes with Shank Ø 6 mm, Stainless Steel and Brass Wire

D mm | *inch*	A mm | *inch*	H mm | *inch*	RPM max.	Pack.	1 ROF 0.20 | *0.008"* Art.-No.	ROF 0.30 | *0.012"* Art.-No.	RO4 0.30 | *0.012"* Art.-No.	2 MES 0.20 | *0.008"* Art.-No.
20 | *3/4*	6 | *1/4*	3 | *1/8*	20,000	10	**411.342**			**411.542**
30 | *1 1/4*	6 | *1/4*	6 | *1/4*	20,000	10	**413.342**	*413.362*		**413.542**
30 | *1 1/4*	9 | *3/8*	6 | *1/4*	20,000	10	**413.343**	*413.363*		*413.543*
40 | *1 3/8*	8 | *5/16*	9 | *3/8*	18,000	10	**414.342**	**414.362**	**414.462**	**414.542**
40 | *1 3/8*	11 | *4/9*	9 | *3/8*	18,000	10	**414.343**	available on demand		*414.543*
50 | *2*	10 | *3/8*	12 | *1/2*	15,000	10	**415.342**	**415.362**	**415.462**	**415.542**
50 | *2*	14 | *9/16*	12 | *1/2*	15,000	10	**415.343**	**415.363**		**415.543**
60 | *2 3/8*	10 | *3/8*	17 | *5/8*	15,000	10	**416.342**	**416.362**	**416.462**	**416.542**
60 | *2 3/8*	14 | *9/16*	17 | *5/8*	15,000	10	**416.343**	**416.363**		**416.543**
70 | *2 3/4*	12 | *1/2*	19 | *3/4*	15,000	10	**417.342**	**417.362**	**417.462**	**417.542**
70 | *2 3/4*	16 | *5/8*	19 | *3/4*	15,000	10	**417.343**	**417.363**		**417.543**
80 | *3 1/4*	12 | *1/2*	20 | *3/4*	15,000	10	**418.342**	**418.362**	**418.462**	**418.542**
80 | *3 1/4*	18 | *3/4*	20 | *3/4*	15,000	10	**418.343**	**418.363**		**418.543**

3 Wheel Brushes with Shank Ø 6 mm, Completely Stainless

D mm | *inch*	A mm | *inch*	H mm | *inch*	RPM max.	Pack.	ROF 0.20 | *0.008"* Art.-No.	ROF 0.30 | *0.012"* Art.-No.
50 | *2*	15 | *5/8*	12 | *1/2*	15,000	10	**415.301**	**415.302**
60 | *2 3/8*	17 | *5/8*	17 | *5/8*	15,000	10	**416.303**	*416.302*
70 | *2 3/4*	18 | *3/4*	19 | *3/4*	15.000	10	**417.306**	**417.309**

4 Wheel Brushes with Shank Ø 6 mm, Silicon Carbide Bristles

D mm | *inch*	A mm | *inch*	H mm | *inch*	RPM max.	Pack.	SIC 120/0.6 Art.-No.	SIC 120/1.1 Art.-No.	SIC 180/1.0 Art.-No.	SIC 320/0.6 Art.-No.
30 | *1 1/4*	6 | *1/4*	6 | *1/4*	18,000	10	**413.841**			**413.871**
40 | *1 3/8*	10 | *3/8*	12 | *1/2*	15,000	10		**414.842**		**414.872**
50 | *2*	10 | *3/8*	12 | *1/2*	15,000	10		**415.842**	*415.852*	**415.872**
70 | *2 3/4*	12 | *1/2*	20 | *3/4*	15,000	10		**417.842**	**417.852**	**417.872**
80 | *3 1/4*	14 | *9/16*	22 | *7/8*	15,000	10		**418.842**	available on demand	**418.872**

Cup Shank Brushes

Cup Brushes with Shank
Ideal for working on medium and large areas.

Cup Shank Brushes with Plastic Cup
Cup Shank Brushes with Plastic Cup and stainless steel wire especially are used for applications on stainless steel materials.
The plastic cup prevents contact with the working piece, therefore it protects from corrosion or other foreign particles.

Bevel Brushes with Shank
Due to the conical form these universal tools are ideal for notches, corners, grooves, inside edges and irregular surfaces. These professional brushes are suitable for drills and cordless screwdrivers as well for high-speed straight grinders and compressed-air drives.

Brushes with steel and stainless steel wire can be used at higher RPM and can therefore be used on electrical and air driven grinding machines. These models are known for their high density of filling material and therefore they have a very long lifetime.

The brushes with silicon carbide bristles can be used for deburring, polishing or structuring of stainless steel, aluminium and plastic surfaces.

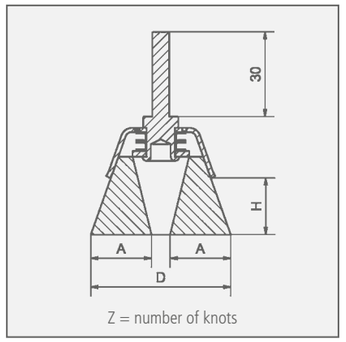

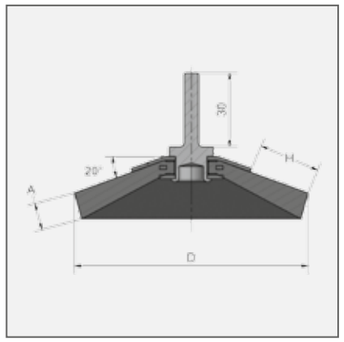

Item Nos. in bold are available ex stock.
Consider our minimum order value for *italic printed* article numbers (see page 148).

STA = steel wire, crimped
STH = steel wire, high tensile, straight
ROF = stainless steel wire, crimped
MES = brass wire, crimped
SIC = silicon carbide bristles

Cup Brushes with Shank Ø 6 mm

D	A	H	RPM	Pack.	1 STA 0.20 | *0.008"*	1 STA 0.30 | *0.012"*	1 ROF 0.20 | *0.008"*	1 ROF 0.30 | *0.012"*	2 MES 0.20 | *0.008"*	2 MES 0.30 | *0.012"*
mm | *inch*	mm | *inch*	mm | *inch*	max.		Art.-No.	Art.-No.	Art.-No.	Art.-No.	Art.-No.	Art.-No.
40 | *1 3/8*	15 | *5/8*	20 | *3/4*	10,500	10	**434.142**	**434.162**	*434.342*	**434.362**	**434.542**	
50 | *2*	22 | *7/8*	20 | *3/4*	10,500	10	**435.142**	**435.162**	*435.342*	**435.362**	**435.542**	**435.562**
60 | *2 3/8*	25 | *1*	25 | *1*	8,000	10	available on demand	**436.162**	available on demand	**436.362**	available on demand	
70 | *2 3/4*	30 | *1 1/4*	25 | *1*	6,000	10	**437.142**	**437.162**	*437.342*	**437.362**	**437.542**	

3 Cup Brushes with Shank Ø 6 mm and Plastic Cup compressed face

D	A	H	RPM	Pack.	ROF 0.20 | *0.008"*	ROF 0.25 | *0.010"*	ROF 0.30 | *0.012"*
mm | *inch*	mm | *inch*	mm | *inch*	max.		Art.-No.	Art.-No.	Art.-No.
40 | *1 3/8*	20 | *3/4*	30 | *1 1/4*	15,000	10	**434.345**	**434.355**	**434.365**
50 | *2*	25 | *1*	28 | *1*	10,500	10	**435.345**	**435.355**	**435.365**

4 Cup Brushes with Shank Ø 6 mm, Silicon Carbide Bristles

D	A	H	RPM	Pack.	SIC 80/1.2	SIC 320/0.6
mm | *inch*	mm | *inch*	mm | *inch*	max.		Art.-No.	Art.-No.
50 | *2*	10 | *3/8*	20 | *3/4*	4,500	10	**430.128**	**430.129**
75 | *3*	15 | *5/8*	22 | *7/8*	4,500	10	**430.138**	**430.139**

5 Knot End Brushes with Shank Ø 6 mm, Steel Wire

D	H	Z	RPM	Pack.	STH 0.50 | *0.020"*
mm | *inch*	mm | *inch*	mm | *inch*	max.		Art.-No.
75 | *3*	20 | *3/4*	18 | *3/4*	4,500	10	**483.230**

6 Knot Bevel Brushes with Shank Ø 6 mm

D	A	H	RPM	Pack.	STA 0.30	ROF 0.30
mm | *inch*	mm | *inch*	mm | *inch*	max.		Art.-No.	Art.-No.
70 | *2 3/4*	12 | *1/2*	15 | *5/8*	15,000	10	**4K7.161**	**4K7.361**
90 | *3 3/4*	12 | *1/2*	25 | *1*	12,000	10	**4K9.161**	**4K9.361**

End Brushes

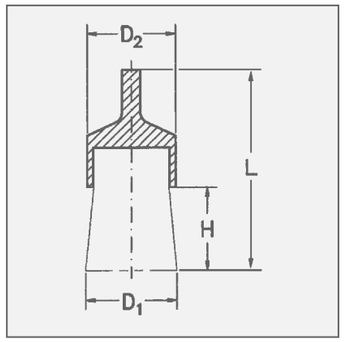

Item Nos. in bold are available ex stock.
Consider our minimum order value for *italic printed* article numbers (see page 148).

STA	= steel wire, crimped
STH	= steel wire, high tensile, straight
ROF	= stainless steel wire, crimped
SIC	= silicon carbide bristles

End Brushes with Shank
For cleaning and deburring in hard to reach areas, removal of paint, rubber excess, cleaning of moulds and castings. Also for working on edges and curves, and in the inside of the bores, etc. End brushes are also available in other shapes, spreaded or pointed.

These brushes are perfect for fast moving tools. On demand also with 1/4" shank available.

Special End Brushes, crimping
The special end brushes with narrow crimped wire are characterized by its dense filling. These brushes show a harder brushing effect than brushes with normal crimped wire (e.g. page 72 - 73). These brushes are also available with extra long shanks or different diameters.

Square End Brushes
This special tool enables e. g. cleaning of blind holes and processing of bottom and side surfaces in one step.
It's perfect for cleaning and easy deburring applications, e. g. square bores. Other diameters available on demand.

Encapsulated Brushes
By embedding in tough plastic the filling width always remains the same and early break of the wires can be prevented. It's the perfect tool for long lasting and safe working. The advantages when working with encapsulated brushes are longer lifetime and harder brush effect. However, it might be possible that the brush will leave marks on the work piece.

Stainlessless Steel Brushes
Further information for brushing on stainless steel you will find on www.lessmann.com

Special Design
For your order please state your requirements regarding the measures and wires.

Special End Brushes with Shank Ø 6 mm, narrow crimping

	D1 mm | *inch*	D2 mm | *inch*	H mm | *inch*	L mm | *inch*	RPM max.	Pack.	**STH 0.35** | *0.014"* Art.-No.	**STH 0.50** | *0.020"* Art.-No.
1	11 | *7/16*	12 | *1/2*	25 | *1*	71 | *2 3/4*	12,000	10	**466.171**	available on demand
2	11 | *7/16*	12 | *1/2*	25 | *1*	71 | *2 3/4*	12,000	10	**466.172***	available on demand*
1	19 | *3/4*	22 | *7/8*	29 | *1 1/8*	72 | *2 3/4*	12,000	10	*460.121*	available on demand
2	19 | *3/4*	22 | *7/8*	29 | *1 1/8*	72 | *2 3/4*	12,000	10	*460.122**	available on demand*

3 Square End Brushes with Shank Ø 6 mm

D1 mm | *inch*	A mm | *inch*	L mm | *inch*	RPM max.	Pack.	**STA 0.15** | *0.006"* Art.-No.	**STA 0.25** | *0.010"* Art.-No.	**ROF 0.30** | *0.012"* Art.-No.
25.4 | *1*	8 | *5/16*	100 | *4*	4,500	10	*469.131*	*469.151*	*469.362*
31.8 | *1 1/4*	8 | *5/16*	100 | *4*	4,500	10	*469.133*	*469.153*	available on demand
38.1 | *1 1/2*	8 | *5/16*	100 | *4*	4,500	10	available on demand	available on demand	available on demand
50.8 | *2*	8 | *5/16*	100 | *4*	4,500	10	available on demand	available on demand	available on demand

4 End Brushes with Shank Ø 6 mm, Encapsulated

D1 mm | *inch*	D2 mm | *inch*	H mm | *inch*	L mm | *inch*	RPM max.	Pack.	**STA 0.30** | *0.012"* Art.-No.
10 | *3/8*	10 | *3/8*	20 | *3/4*	65 | *2 1/2*	15,000	10	**451.160**
16 | *5/8*	16 | *5/8*	25 | *1*	72 | *2 7/8*	15,000	10	**452.160**
22 | *7/8*	22 | *7/8*	25 | *1*	72 | *2 7/8*	15,000	10	**453.160**
28 | *1 1/8*	28 | *1 7/64*	30 | *1 1/4*	75 | *3*	10,000	10	**456.160**

5 End Brushes with Shank Ø 6 mm, Silicon Carbide Bristles

D1 mm | *inch*	D2 mm | *inch*	H mm | *inch*	L mm | *inch*	RPM max.	Pack.	**SIC 120/1.1** Art.-No.	**SIC 180/1.0** Art.-No.	**SIC 320/0.6** Art.-No.
12 | *1/2*	10 | *3/8*	20 | *3/4*	60 | *2 3/8*	20,000	10	**451.831**	*451.851*	*451.871*
17 | *5/8*	16 | *5/8*	22 | *7/8*	68 | *2 3/4*	20,000	10	**452.831**	*452.851*	available on demand
23 | *7/8*	22 | *7/8*	25 | *1*	70 | *2 3/4*	10,000	10	*454.831*	**454.851**	**454.871**
30 | *1 1/4*	28 | *1*	30 | *1 1/4*	75 | *3*	10,000	10	*456.831*	**456.851**	**456.871**

* pointed

End Brushes

End Brushes with Shank Ø 6 mm, Steel Wire

	D1 mm | *inch*	D2 mm | *inch*	H mm | *inch*	L mm | *inch*	RPM max.	Pack.	**STA 0.15** | *0.006"* Art.-No.	**STA 0.20** | *0.008"* Art.-No.	**STA 0.30** | *0.012"* Art.-No.	**STA 0.50** | *0.020"* Art.-No.
1	12 | *1/2*	10 | *3/8*	20 | *3/4*	60 | *2 3/8*	20,000	10	**451.131**	**451.141**	**451.161**	**451.191**
2	12 | *1/2*	10 | *3/8*	20 | *3/4*	60 | *2 3/8*	20,000	10			**451.162***	*451.192**
3	12 | *1/2*	10 | *3/8*	20 | *3/4*	120 | *4 3/4*	15,000	10	**458.131**	**458.141**	**458.161**	**458.191**
4	17 | *5/8*	16 | *5/8*	22 | *7/8*	65 | *2 1/2*	20,000	10	*452.131*	**452.141**	**452.161**	**452.191**
5	23 | *7/8*	22 | *7/8*	25 | *1*	68 | *2 3/4*	18,000	10	**453.131**	**453.141**	**453.161**	**453.191**
	30 | *1 1/4*	29 | *1 1/8*	25 | *1*	68 | *2 3/4*	18,000	10	**456.131**	**456.141**	**456.161**	**456.191**
	50 | *2*	22 | *7/8*	18 | *3/4*	68 | *2 3/4*	18,000	10			**453.163****	
6	70 | *2 3/4*	29 | *1 1/8*	25 | *1*	68 | *2 3/4*	18,000	10			**456.163****	

NEW 9 **End Brushes with Shank Ø 6 mm, Steel Wire high tensile, dense version, longer lifetime**

D1 mm | *inch*	D2 mm | *inch*	H mm | *inch*	L mm | *inch*	RPM max.	Pack.	**STH 0.30** | *0.012"* Art.-No.
12 | *1/2*	12 | *1/2*	20 | *3/4*	66 | *2 1/2*	20,000	10	**451.261.BD**
17 | *5/8*	16 | *5/8*	22 | *7/8*	65 | *2 1/2*	20,000	10	**452.261.BD**
23 | *7/8*	22 | *7/8*	25 | *1*	68 | *2 3/4*	18,000	10	**453.261.BD**
30 | *1 1/4*	29 | *1 1/8*	25 | *1*	68 | *2 3/4*	18,000	10	**456.261.BD**

End Brushes with Shank Ø 6 mm, Brassed Steel Wire, Cord Wire

D1 mm | *inch*	D2 mm | *inch*	H mm | *inch*	L mm | *inch*	RPM max.	Pack.	7 **STM 0.25** | *0.010"* Art.-No.	8 **STL 0.175** | *0.007"* Art.-No.	8 **STL 0.22** | *0.009"* Art.-No.
17 | *5/8*	16 | *5/8*	22 | *7/8*	65 | *2 1/2*	20,000	10	**452.751**	*452.703*	*452.705*
23 | *7/8*	22 | *7/8*	25 | *1*	68 | *2 3/4*	18,000	10	**453.751**	*453.703*	*453.705*
30 | *1 1/4*	29 | *1 1/8*	25 | *1*	68 | *2 3/4*	18,000	10	*456.751*	*456.703*	*456.705*

* pointed | ** spreaded

End Brushes with Shank Ø 6 mm, Stainless Steel and Brass Wire

	D1 mm | *inch*	D2 mm | *inch*	H	L	RPM max.	Pack.	1 **ROF 0.20** | *0.008"* Art.-No.	1 **ROF 0.30** | *0.012"* Art.-No.	2 **MES 0.20** | *0.008"* Art.-No.	2 **MES 0.30** | *0.012"* Art.-No.
	12 | *1/2*	10 | *3/8*	20	60	20,000	10	**451.341**	**451.361**	**451.541**	**451.561**
	12 | *1/2*	10 | *3/8*	20	60	20,000	10		**451.362***	available on demand	available on demand
3	12 | *1/2*	10 | *3/8*	20	120	15,000	10	**458.341**	**458.361**	**458.541**	**458.561**
	17 | *5/8*	16 | *5/8*	22	65	20,000	10	**452.341**	**452.361**	**452.541**	**452.561**
	23 | *7/8*	22 | *7/8*	25	68	18,000	10	**453.341**	**453.361**	**453.541**	**453.561**
	30 | *1 1/4*	29 | *1 1/8*	25	68	18,000	10	**456.341**	**456.361**	**456.541**	**456.561**
	50 | *2*	22 | *7/8*	18	68	18,000	10		**453.363****		

End Brushes with Shank Ø 6 mm, complete Stainless Steel

D1 mm | *inch*	D2 mm | *inch*	H	L	RPM max.	Pack.	**ROF 0.30** | *0.012"* Art.-No.
12 | *1/2*	10 | *3/8*	20	60	20,000	10	**451.305**
17 | *5/8*	16 | *5/8*	22	65	20,000	10	**452.304**
23 | *7/8*	22 | *7/8*	25	68	18,000	10	**453.301**

* pointed | ** spreaded

Brushes also available with plastic cover.

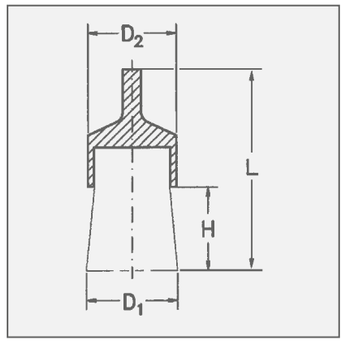

Item Nos. in bold are available ex stock.
Consider our minimum order value for *italic printed* article numbers (see page 148).

STA = steel wire, crimped
STH = steel wire, high tensile, crimped
STM = brass coated steel, crimped
STL = cord wire, crimped
ROF = stainless steel wire, crimped
MES = brass wire, crimped

Knot End Brushes

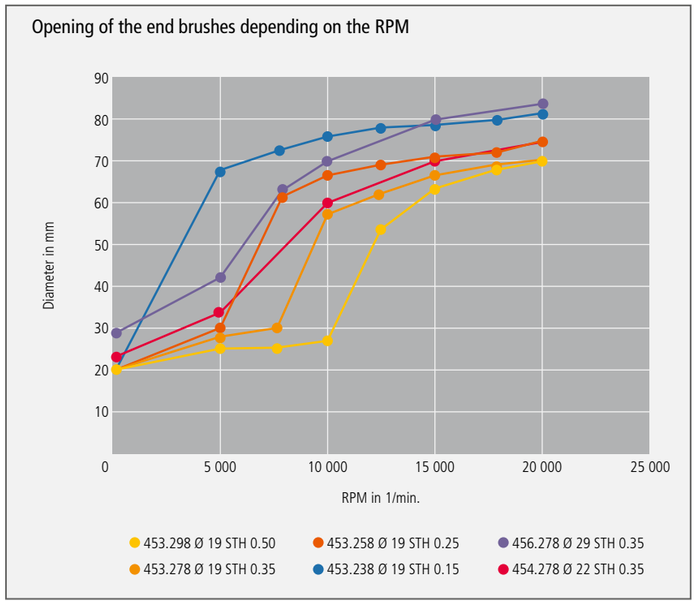

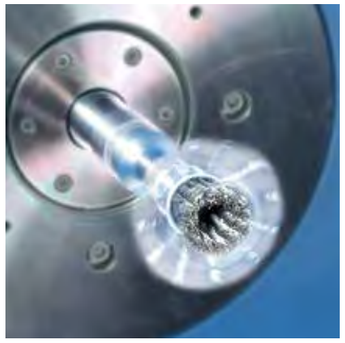

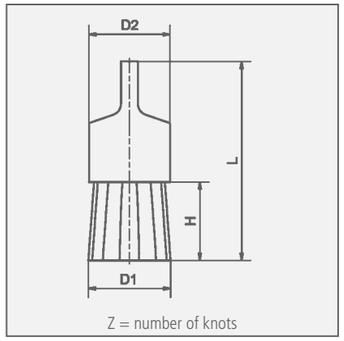

Knotted End Brushes with Shank
According to the RPM the brush will vary in dimension and enable the user to work in hard to reach areas such as drilled holes and recesses of all kinds.
The cups of the knot end brushes with stainless steel wire are **coated with plastic** to protect the stainless surface. Knotted end brushes with stainless steel wire are green characterized.

Further information on working on stainless steel you find at www.lessmann.com

Special End Brushes with Shank 6 Ø, one Knot
One-knotted End Brushes to render precise working possible.

End Brushes, filled with epoxy resin
End Brushes filled with epoxy resin are able to treat small, defined areas. The brushes are more aggressive and allow a precise handling, hence they are used e.g. for electrical cabinets or for treating mounting surfaces.

Item Nos. in bold are available ex stock.
Consider our minimum order value for *italic printed* article numbers (see page 148).

STH = steel wire, high tensile, straight
STM = brass coated steel, crimped
RO4 = stainless steel wire, straight, 1.4401

Knot End Brushes with Shank Ø 6 mm, Steel Wire

	D1/D2 mm | *inch*	L mm | *inch*	H mm | *inch*	Z	RPM max.	Pack.	**STH 0.15** | *0.006"* Art.-No.	**STH 0.25** | *0.010"* Art.-No.	**STH 0.35** | *0.014"* Art.-No.	**STH 0.50** | *0.020"* Art.-No.
1	6/10 | *1/4/3/8*	65 | *2 1/2*	25 | *1*	1	4,500	10	available on demand	**451.258**	**451.278**	available on demand
2	19 | *3/4*	72 | *2 7/8*	28 | *1*	6	20,000	10		**453.258**	**453.278**	**453.298**
3	22 | *7/8*	72 | *2 7/8*	28 | *1*	8	20,000	10	*454.238*	**454.258**	**454.278**	**454.298**
4	29 | *1 1/8*	72 | *2 7/8*	28 | *1*	12	20,000	10	available on demand	**456.258**	**456.278**	**456.298**
5	19 | *3/4*	72 | *2 7/8*	28 | *1*	4	20,000	50	available on demand	available on demand	**452.278GH***	available on demand

6 Knot End Brushes with Shank Ø 6 mm, without Rose Bud, Brass Wire

D1/D2 mm | *inch*	L mm | *inch*	H mm | *inch*	Z	RPM max.	Pack.	**STM 0.25** | *0.010"* Art.-No.
19 | *3/4*	72 | *2 7/8*	28 | *1*	6	20,000	10	**453.758**
22 | *7/8*	72 | *2 7/8*	28 | *1*	8	20,000	10	**454.758**
29 | *1 1/8*	72 | *2 7/8*	28 | *1*	12	20,000	10	**456.758**

7 Knot End Brushes with Shank Ø 6 mm, Stainless Steel Wire

D1/D2 mm | *inch*	L mm | *inch*	H mm | *inch*	Z	RPM max.	Pack.	**RO4 0.15** | *0.006"* Art.-No.	**RO4 0.25** | *0.010"* Art.-No.	**RO4 0.35** | *0.014"* Art.-No.	**RO4 0.50** | *0.020"* Art.-No.
6/10 | *1/4/3/8*	65 | *2 1/2*	25 | *1*	1	4,500	10	available on demand	**451.458**	**451.478**	available on demand
19 | *3/4*	72 | *2 7/8*	28 | *1*	6	20,000	10	**453.338**	**453.358**	**453.378**	available on demand
22 | *7/8*	72 | *2 7/8*	28 | *1*	8	20,000	10	*454.338*	**454.358**	**454.378**	**454.398**
29 | *1 1/8*	72 | *2 7/8*	28 | *1*	12	20,000	10	*456.338*	**456.358**	**456.378**	**456.398**

* filled with epoxy resin

Miniature Brushes

Miniature Brushes
Miniature Brushes are used for polishing, cleaning, or deburring of small-area surfaces or small working pieces. Miniature brushes remove waste and scale from weld seams or soldering points. The brushes are used on metal surfaces, steel, aluminum, cast iron, plastics, stone or wood.

Typical fields of applications:
- Precision tools
- Fine mechanics
- Pneumatic and hydraulics
- Electronics parts, e.g. plates

Miniature Brushes are available in different types as wheel, cup and end brushes.
The typical filling materials are steel wire, stainless steel wire, brass wire or abrasive bristles.

Stainless Steel Brushes
Information on working on stainless steel you find at www.lessmann.com

Please Note: Brushes with bristles or goat hair achieve an ideal brushing result by using polish.

Item Nos. in bold are available ex stock.
Consider our minimum order value for *italic printed* article numbers (see page 148).

STH	= steel wire, high tensile, straight
ROF	= stainless steel wire, crimped
MES	= brass wire, crimped
PA	= polyamide
SIC	= silicon carbide bristles
AO	= aluminium oxide bristles

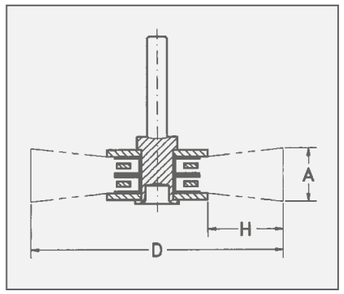

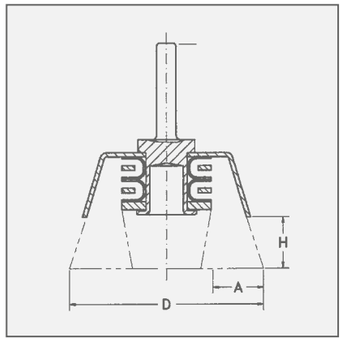

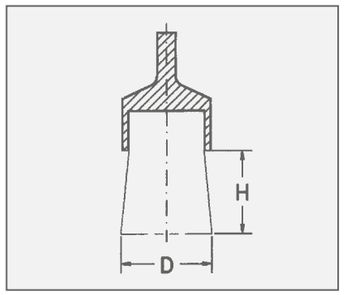

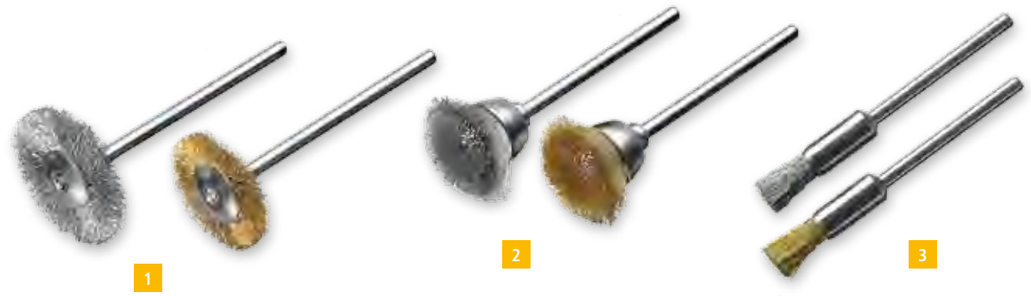

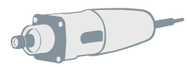

1 Miniature Wheel Brushes with shank Ø 3 mm

D mm | *inch*	A	H	RPM max.	Pack.	STH 0.10 Art.-No.	ROF 0.10 Art.-No.	MES 0.10 Art.-No.	SIC 320/0.55 Art.-No.	SIC 500/0.46 Art.-No.	SIC 800/0.25 Art.-No.	AO 320/0.50 Art.-No.
16 | *5/8*	2	3	15,000	10	**410.221**	**410.321**	*410.521*	*410.871*	*410.881*	*410.891*	*410.871.AO*
19 | *3/4*	2	5	12,000	10	**410.222**	**410.322**	**410.522**	*410.872*	*410.882*	*410.892*	*410.872.AO*
22 | *7/8*	2	6	10,000	10	**410.223**	**410.323**	**410.523**	*410.873*	**410.883**	*410.893*	*410.873.AO*

D mm | *inch*	A	H	RPM max.	Pack.	AO 500/0.46 Art.-No.	AO 600/0.30 Art.-No.	Diamond K400 Art.-No.	PA 0.15 Art.-No.	Bristle white Art.-No.	Bristle schwarz Art.-No.	Goat hair Art.-No.
16 | *5/8*	2	3	15,000	10	*410.801*	*410.891.AO*	*410.811.DB*	*410.031*	*410.001.WB*	*410.001.SB*	*410.001.ZH*
19 | *3/4*	2	5	12,000	10	*410.802*	*410.892.AO*	*410.812.DB*	*410.032*	*410.002.WB*	*410.002.SB*	*410.002.ZH*
22 | *7/8*	2	6	10,000	10	*410.803*	*410.893.AO*	*410.813.DB*	**410.033**	**410.003.WB**	**410.003.SB**	**410.003.ZH**

2 Miniature Cup Brushes with shank Ø 3 mm

D mm | *inch*	A	H	RPM max.	Pack.	STH 0.10 Art.-No.	ROF 0.10 Art.-No.	MES 0.10 Art.-No.	SIC 320/0.55 Art.-No.	SIC 500/0.46 Art.-No.	SIC 800/0.25 Art.-No.	AO 320/0.50 Art.-No.
15 | *5/8*	2	5	15,000	10	**430.222**	**430.322**	**430.522**	*430.872*	*430.882*	*430.092*	*430.872.AO*
18 | *3/4*	2	6	10,000	10	**430.223**	**430.323**	**430.523**	*430.873*	**430.883**	*430.893*	*430.873.AO*

D mm | *inch*	A	H	RPM max.	Pack.	AO 500/0.46 Art.-No.	AO 600/0.30 Art.-No.	Diamond K400 Art.-No.	PA 0.15 Art.-No.	Bristle white Art.-No.	Bristle schwarz Art.-No.	Goat hair Art.-No.
15 | *5/8*	2	5	15,000	10	*430.802*	*430.892.AO*	*430.812.DB*	**430.031**	**430.001.WB**	**430.001.SB**	**430.001.ZH**
18 | *3/4*	2	6	10,000	10	*430.803*	*430.893.AO*	*430.813.DB*	*430.032*	*430.002.WB*	*430.002.SB*	*430.002.ZH*

3 Miniature End Brushes with shank Ø 3 mm

D mm | *inch*	H	RPM max.	Pack.	STH 0.10 Art.-No.	ROF 0.10 Art.-No.	MES 0.10 Art.-No.	SIC 320/0.55 Art.-No.	SIC 500/0.46 Art.-No.	SIC 800/0.25 Art.-No.	AO 320/0.50 Art.-No.
5 | *13/64*	8	15,000	10	**450.221**	**450.311**	**450.521**	*450.871*	**450.881**	*450.891*	*450.871.AO*

D mm | *inch*	H	RPM max.	Pack.	AO 500/0.46 Art.-No.	AO 600/0.30 Art.-No.	Diamond K400 Art.-No.	PA 0.15 Art.-No.	Bristle white Art.-No.	Bristle schwarz Art.-No.	Goat hair Art.-No.
5 | *13/64*	8	15,000	10	*450.801*	*450.891.AO*	*450.821.DB*	**450.031**	**450.001.WB**	**450.001.SB**	**450.001.ZH**

All Brushes also available with shank Ø 2,34 and 3,17 mm.

LESSMANN®
THE GERMAN BRUSH COMPANY

HAND BRUSHES AND BROOMS

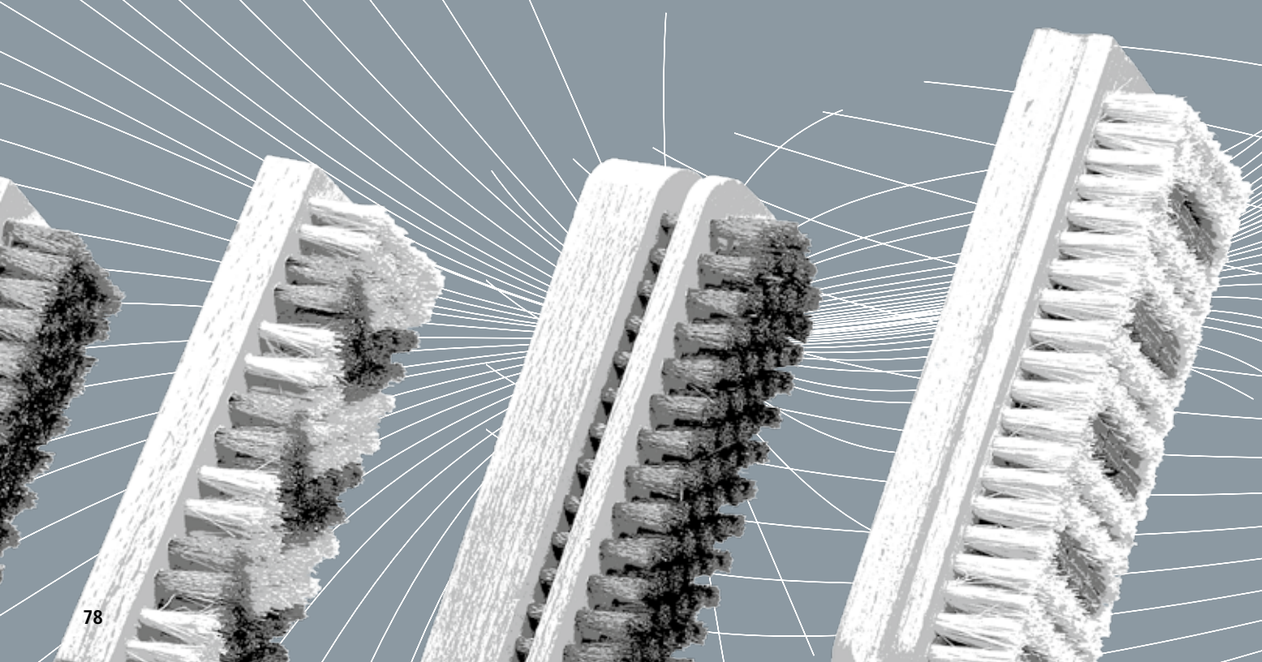

Hand Brushes

Hand Brushes
Hand Brushes are used everywhere, in the metal industry, construction work, in the workshop. They are found in every tool box. The complete range contains all types of filling materials, from coarse steel to the finest brass wire. The handles are made of beech wood with two hanging holes.

LESSMANN Handbrushes are of superb quality and yet are economic due to a fully automated and efficient production facility. Using modern marking systems individual printing of brands and EAN Bar Codes can be made. This is done by burning stamps or tampon printing at low cost.

Brake Caliper Brushes ROKI
This brush has been manufactured in co-operation with the automobile industry. This brush is used for cleaning off clogged lining deposits when changing brake pad linings. Thus the brush is very slim with a heavy straight wire filling. Made in this way it prevents damage to sensitive brake areas during use. The brush 182.431 has to the top a sloping filling and is therefore extra hard. New is the two-components-handle with the latest ergonomical aspects. Because of the design and the ergonomic handle this brush is remarkably versatile to use.

Hand Brushes with Two-Components Handles
apply to other requirements of modern high quality tools with best ergonomics.

Rivet Brushes
The V shaped filling material enables the removal of slag and scale from normally hard to reach welds and fillet welds

Hand Brushes with Scraper
For painters and bricklayers in the construction industry. These brushes are ideal for scraping off dirt or cement splashes.

Hand Brushes, Heavy Duty
These models have a larger wooden handle and a longer and dense wire filling than our standard models.

Universal Wire Brushes
For many uses, especially in the Do It Yourself section.

Stainless Steel Brushes
Information on brushing on stainless materials you will find at www.lessmann.com

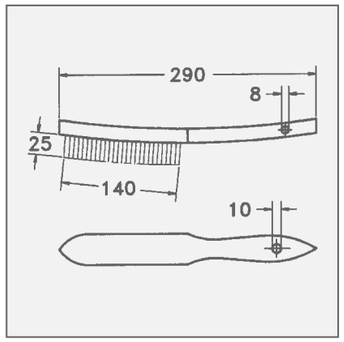

All standard hand brushes have a bar code stamp and LESSMANN-imprint.

PEFC
PEFC/04-31-0389

We are accredited!

Hand Brushes Standard

EAN

Hand Brushes

	Rows >	1	2	3	4	5	6
Filling	Pack.	Art.-No.	Art.-No.	Art.-No.	Art.-No.	Art.-No.	Art.-No.
1 **STA** straight 0.35 | *0.014"*	12	**100.011**	**100.021**	**100.031**	**100.041**	**100.051**	**100.061**
STA straight 0.35 | *0.014"*	100		**100.020**	**100.030**	**100.040**	**100.050**	
STM crimped 0.30 | *0.012"*	12		**105.421**	**105.431**	**105.441**	**105.451**	**105.461**
STA crimped 0.20 | *0.008"*	12			**102.431**	**102.441**		
STA crimped 0.30 | *0.012"*	12	**102.611**	**102.621**	**102.631**	**102.641**	**102.651**	**102.661**
2 **ROF** crimped 0.15 | *0.006"*	12		**104.321**	**104.331**	**104.341**	**104.351**	
ROF crimped 0.20 | *0.008"*	12		**104.421**	**104.431**	**104.441**	**104.451**	
ROF crimped 0.35 | *0.012"*	12	**104.611**	**104.621**	**104.631**	**104.641**	**104.651**	**104.661**
ROF straight 0.35 | *0.012"*	12	**103.711**	**103.721**	**103.731**	**103.741**	**103.751**	**103.761**
RO8 straight 0.30 | *0.012"*	12		**105.721**	**105.731**	**105.741**		
3 **MES** crimped 0.15 | *0.006"*	12		**107.321**	**107.331**	**107.341**	**107.351**	
MES crimped 0.25 | *0.010"*	12	*107.411*	**107.421**	**107.431**	**107.441**	**107.451**	**107.461**
MES crimped 0.35 | *0.014"*	12	*107.611*	**107.621**	**107.631**	**107.641**	**107.651**	**107.661**
MES straight 0.35 | *0.014"*	12		**106.621**	**106.631**	**106.641**	**106.651**	
BRO crimped 0.20 | *0.008"*	12			*108.331*	**108.341**	**108.351**	
PA straight 0.40 | *0.016"*	12			**109.431**	**109.441**	**109.451**	
4 **FIB**	12				**109.741**		

Other filling materials and trim length on request.

Item Nos. in bold are available ex stock.
Consider our minimum order value for *italic printed* article numbers (see page 148).

STA = steel wire
STM = brass coated steel
ROF = stainless steel wire
RO8 = stainless steel wire, extremely heat resistant
MES = brass wire
BRO = bronze wire
PA = polyamide
FIB = fibre

Special Hand Brushes

1 2 3 4 6 5

Special Hand Brushes

	Filling	Rows	L	B	A	H	Pack.	Art.-No.
	Brake Caliper Brushes with Two-Components Handles		mm | *inch*	mm | *inch*	mm | *inch*	mm | *inch*		
1	**STA** straight 0.35 | *0.014"*	2 x 13	225 | *9*	12 | *1/2*	90 | *3 1/2*	22 | *7/8*	10	**182.401**
	STA crimped 0.30 | *0.012"*	2 x 13	225 | *9*	12 | *1/2*	90 | *3 1/2*	22 | *7/8*	10	**182.411**
2	**STA** straight 0.35 | *0.014"*	2 x 12/13	225 | *9*	12 | *1/2*	90 | *3 1/2*	12/18 | *1/2/5/8*	10	**182.431***
3	**ROF** straight 0.35 | *0.014"*	2 x 13	225 | *9*	12 | *1/2*	90 | *3 1/2*	22 | *7/8*	10	**182.421**
4	**MES** crimped 0.25 | *0.010"*	2 x 13	225 | *9*	12 | *1/2*	90 | *3 1/2*	22 | *7/8*	10	**182.451**
	Hand Brushes with Plastic Handles							
5	**STA** straight 0.35 | *0.014"*	2	285 | *11 1/4*	20 | *3/4*	130 | *5 1/8*	25 | *1*	10	**185.121**
	STA straight 0.35 | *0.014"*	3	285 | *11 1/4*	26 | *1*	130 | *5 1/8*	25 | *1*	10	**185.131**
	STA straight 0.35 | *0.014"*	4	285 | *11 1/4*	31 | *1 1/4*	130 | *5 1/8*	25 | *1*	10	**185.141**
	STA straight 0.35 | *0.014"*	5	285 | *11 1/4*	31 | *1 1/4*	130 | *5 1/8*	25 | *1*	10	**185.151**
	ROF crimped 0.35 | *0.014"*	2	285 | *11 1/4*	20 | *3/4*	130 | *5 1/8*	25 | *1*	10	**185.421**
	ROF crimped 0.35 | *0.014"*	3	285 | *11 1/4*	26 | *1*	130 | *5 1/8*	25 | *1*	10	**185.431**
	ROF crimped 0.35 | *0.014"*	4	285 | *11 1/4*	31 | *1 1/4*	130 | *5 1/8*	25 | *1*	10	**185.441**
	ROF crimped 0.35 | *0.014"*	5	285 | *11 1/4*	31 | *1 1/4*	136 | *5 1/8*	25 | *1*	10	**185.451**
	MES straight 0.35 | *0.014"*	2	285 | *11 1/4*	20 | *3/4*	130 | *5 1/8*	25 | *1*	10	**185.621**
	MES straight 0.35 | *0.014"*	3	285 | *11 1/4*	26 | *1*	130 | *5 1/8*	25 | *1*	10	**185.631**
	MES straight 0.35 | *0.014"*	4	285 | *11 1/4*	31 | *1 1/4*	130 | *5 1/8*	25 | *1*	10	**185.641**
	MES straight 0.35 | *0.014"*	5	285 | *11 1/4*	31 | *1 1/4*	130 | *5 1/8*	25 | *1*	10	*185.651*
	Hand Brushes with Two-Components Handles							
6	**ROF** straight 0.35 | *0.014"*	3	285 | *11 1/4*	26 | *1*	130 | *5 1/8*	25 | *1*	10	**186.431**

* Special hard brushes, pointed | For the food industry

Brushes for the food industry
These brushes comply to the hygiene charter of the FEIBP (European Brushware Federation) and are accredited in the food industry.

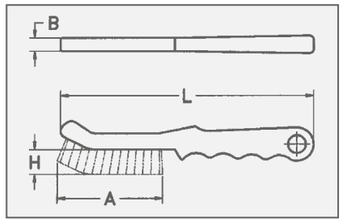

Special Hand Brushes

1 2 3 4 5 6 7

Special Hand Brushes

	Filling	Rows	L	B	A	H	Pack.	Art.-No.
			mm | *inch*	mm | *inch*	mm | *inch*	mm | *inch*		
EAN 1	**Rivet Brushes**							
	STA straight 0.35 | *0.014"*	3 x 15	290 | *11 3/8*	35 | *1 1/2*	135 | *5 3/8*	35 | *1 1/2*	12	**120.801**
	ROF straight 0.35 | *0.014"*	3 x 15	290 | *11 3/8*	35 | *1 1/2*	135 | *5 3/8*	35 | *1 1/2*	12	**120.811**
	RO8 straight 0.30 | *0.012"*	3 x 15	290 | *11 3/8*	35 | *1 1/2*	135 | *5 3/8*	35 | *1 1/2*	12	**120.831**
	ROF straight 0.35 | *0.014"* with Plastic Handles	3 x 15	290 | *11 3/8*	31 | *1 1/4*	135 | *5 3/8*	35 | *1 1/2*	12	**185.811**
EAN 2	**Hand Brushes with Scraper**							
	STA straight 0.35 | *0.014"*	4 x 15	290 | *11 3/8*	33 | *1 1/4*	130 | *5 1/8*	25 | *1*	12	**120.401**
	STA straight 0.35 | *0.014"*	6 x 15	290 | *11 3/8*	38 | *1 1/2*	130 | *5 1/8*	25 | *1*	12	*120.601*
	ROF straight 0.35 | *0.014"*	4 x 15	290 | *11 3/8*	33 | *1 1/4*	130 | *5 1/8*	25 | *1*	12	*120.412*
3	**Hand Brushes Heavy Duty**							
	STA straight 0.35 | *0.014"*	2 x 16	290 | *11 3/8*	30 | *1 1/4*	150 | *6*	32 | *1 1/4*	12	**136.101**
	STA straight 0.35 | *0.014"*	3 x 16	290 | *11 3/8*	35 | *1 1/2*	150 | *6*	32 | *1 1/4*	12	**136.102**
	STA straight 0.35 | *0.014"*	4 x 16	290 | *11 3/8*	40 | *1 3/8*	150 | *6*	32 | *1 1/4*	12	**136.103**
	Hand Brushes Export Model							
4	**STA** straight 0.35 | *0.014"*	4 x 17	300 | *12*	30 | *1 1/4*	130 | *5 1/8*	25 | *1*	12	**122.401**
5	**STA** straight 0.35 | *0.014"*	4 x 19	350 | *14*	30 | *1 1/4*	160 | *6 3/8*	30 | *1 1/4*	6	**122.801**
6	**BRO** straight 0.30 | *0.012"*	4 x 19	350 | *14*	30 | *1 1/4*	150 | *6*	30 | *1 1/4*	6	**122.821**
7	**Universal Wire Brushes**							
	STM crimped 0.30 | *0.012"*	1	260 | *10 1/4*	10 | *3/8*	135 | *5 3/8*	28 | *1*	24	**056.001**
	STA crimped 0.35 | *0.014"*	1	260 | *10 1/4*	10 | *3/8*	135 | *5 3/8*	28 | *1*	24	**056.301**
	ROF crimped 0.30 | *0.012"*	1	260 | *10 1/4*	10 | *3/8*	135 | *5 3/8*	28 | *1*	24	**056.501**
	MES crimped 0.30 | *0.012"*	1	260 | *10 1/4*	10 | *3/8*	135 | *5 3/8*	28 | *1*	24	**056.701**

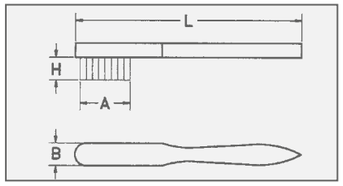

Item Nos. in bold are available ex stock.
Consider our minimum order value for *italic printed* article numbers (see page 148).

STA	= steel wire
STM	= brass coated steel
ROF	= stainless steel wire
RO8	= stainless steel wire, extremely heat resistant
MES	= brass wire
BRO	= bronze wire

Spark Plug Brushes

1 2 3 4 5 6 7

Standard Spark Plug Brushes

		Filling	Rows	L mm | *inch*	B mm | *inch*	A mm | *inch*	H mm | *inch*	Pack.	Art.-No.
EAN	1	**MES** crimped 0.15 | *0.006"*	3 x 5/6	150 | *6*	15 | *5/8*	40 | *1 3/8*	15 | *5/8*	12	**125.211**
EAN		**STA** crimped 0.15 | *0.006"*	3 x 5/6	150 | *6*	15 | *5/8*	40 | *1 3/8*	15 | *5/8*	12	**125.201**
EAN		**ROF** crimped 0.15 | *0.006"*	3 x 5/6	150 | *6*	15 | *5/8*	40 | *1 3/8*	15 | *5/8*	12	**125.231**
EAN		**MES** crimped 0.15 | *0.006"* / PP	3 x 5/6	150 | *6*	15 | *5/8*	40 | *1 3/8*	15 | *5/8*	12	**125.221**
EAN		**MES** crimped 0.15 | *0.006"*	3 x 5/6	150 | *6*	15 | *5/8*	40 | *1 3/8*	15 | *5/8*	12	**125.311***
EAN		**ROF** crimped 0.20 | *0.008"*	3 x 5/6	150 | *6*	15 | *5/8*	40 | *1 3/8*	15 | *5/8*	12	**125.241**
EAN		**PA** straight 0.30 | *0.012"*	3 x 5/6	150 | *6*	15 | *5/8*	40 | *1 3/8*	15 | *5/8*	12	**125.251**
	2	**BRO** crimped 0.15 | *0.006"*	3 x 5/6	200 | *8*	15 | *5/8*	40 | *1 3/8*	15 | *5/8*	12	**132.801**
		Small Spark Plug Brushes							
	3	**MES** crimped 0.15 | *0.006"*	2 x 5	100 | *4*	15 | *5/8*	25 | *1*	15 | *5/8*	12	**125.111**
	4	**MES** crimped 0.15 | *0.006"*	2 x 4	100 | *4*	12 | *1/2*	22 | *7/8*	12 | *1/2*	12	**182.001****
		Large Spark Plug Brushes							
		MES crimped 0.15 | *0.006"*	5 x 8/10	190 | *1 1/2*	24 | *1*	55 | *2 1/4*	18 | *3/4*	12	**125.511**
	5	**MES** crimped 0.15 | *0.006"* / PP	5 x 8/10	190 | *1 1/2*	24 | *1*	55 | *2 1/4*	12 | *1/2*	12	**125.521**
	6	**MES** crimped 0.15 | *0.006"*	4 x 6	155 | *6*	22 | *7/8*	40 | *1 3/8*	18 | *3/4*	12	**182.331****
		Soldering tip brush, extra dense filament, wooden handle orange coated							
EAN	7	**ROF** crimped 0.10 | *0.004"*	3 x 7/8	150 | *6*	15 | *5/8*	39 | *1 3/8*	9	12	**125.234**

* Wooden body varnished | ** Plastic body

Spark Plug Brushes
These small brushes are for all fine brushwork requiring thin wire.
They are available in different sizes and filling marterials. The models 182.001 and 182.331 have plastic bodies, the other models have a beech wood body.
The body of 125.311 is varnished.

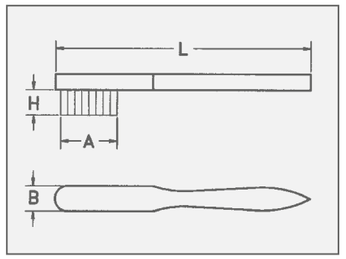

Item Nos. in bold are available ex stock.
Consider our minimum order value for *italic printed* article numbers (see page 148).

STA	= steel wire
ROF	= stainless steel wire
MES	= brass wire
BRO	= bronze wire
PA	= polyamide
PP	= polyprophylene
ROS	= horse hair

Fine Scratch Brushes

1 2 3 4 5 6 7 8 9

Fine Scratch Brushes

	Filling	Rows	L mm | *inch*	B mm | *inch*	A mm | *inch*	H mm | *inch*	Pack.	Art.-No.
1	**MES** crimped 0.15 | *0.006"*	3	225 | *9*	16 | *5/8*	110 | *4 3/8*	20 | *3/4*	12	**126.311**
1	**MES** crimped 0.15 | *0.006"*	4	225 | *9*	20 | *3/4*	110 | *4 3/8*	20 | *3/4*	12	**126.411**
1	**MES** crimped 0.15 | *0.006"*	5	225 | *9*	24 | *1*	110 | *4 3/8*	20 | *3/4*	12	**126.511**
1	**MES** crimped 0.15 | *0.006"*	6	225 | *9*	28 | *1*	110 | *4 3/8*	20 | *3/4*	12	**126.611**
1	**MES** crimped 0.15 | *0.006"*	8	225 | *9*	36 | *1 1/2*	110 | *4 3/8*	20 | *3/4*	12	*126.811*
1	**MES** crimped 0.08 | *0.003"*	4	225 | *9*	20 | *3/4*	110 | *4 3/8*	20 | *3/4*	12	**126.441**
1	**MES** crimped 0.10 | *0.004"*	4	225 | *9*	20 | *3/4*	110 | *4 3/8*	20 | *3/4*	12	**126.431**
1	**MES** crimped 0.15 | *0.006"*	4	225 | *9*	20 | *3/4*	100 | *4*	20 | *3/4*	12	**182.162****
	ROF crimped 0.15 | *0.006"*	4	225 | *9*	20 | *3/4*	110 | *4 3/8*	20 | *3/4*	12	**126.481**
9	**ROF** crimped 0.15 | *0.006"*	4	225 | *9*	20 | *3/4*	100 | *4*	20 | *3/4*	12	**182.152****
2	**STA** crimped 0.15 | *0.006"*	4	225 | *9*	20 | *3/4*	110 | *4 3/8*	20 | *3/4*	12	**126.401**
3	**PA** straight 0.30 | *0.012"*	4	225 | *9*	20 | *3/4*	110 | *4 3/8*	20 | *3/4*	12	**126.451**
3	**PP** straight 0.30 | *0.012"*	4	225 | *9*	20 | *3/4*	100 | *4 3/8*	20 | *3/4*	12	**182.172****
4	**ROS**	4	225 | *9*	20 | *3/4*	110 | *4 3/8*	20 | *3/4*	12	**126.472**
	Special Brushes							
6	**MES** crimped 0.35 | *0.014"*	4 x 11/12	350 | *14*	22 | *7/8*	80 | *3*	10 | *3/8*	12	**137.701**
7	**MES** crimped 0.30 | *0.012"*	5 x 9	700 | *27 1/2*	25 | *1*	54 | *2 1/4*	6 | *1/4*	12	**138.704**
	MES crimped 0.30 | *0.012"*	4 x 11/12	450 | *17 3/4*	22 | *7/8*	80 | *3*	8 | *5/16*	12	**138.705**
5	**MES** crimped 0.35 | *0.014"*	4 x 11/12	350 | *14*	22 | *7/8*	77 | *3*	10 | *3/8*	12	**182.807****
5	**MES** crimped 0.35 | *0.014"*	4 x 11/12	400 | *15 3/4*	20 | *3/4*	77 | *3*	10 | *3/8*	12	**183.704****
5	**MES** crimped 0.35 | *0.014"*	4 x 11/12	450 | *17 3/4*	22 | *7/8*	77 | *3*	10 | *3/8*	12	*182.811***
5	**MES** crimped 0.30 | *0.012"*	5 x 9/8	700 | *27 1/2*	25 | *1*	54 | *2 1/4*	6 | *1/4*	12	*183.706***
8	**MES** crimped 0.25 | *0.010"*	2 x 10	200 | *8*	15 | *5/8*	80 | *3*	19 | *3/4*	12	**132.701**

** Plastic body | For the food industry

Fine Scratch Brushes
Also called watchmaker and goldsmith brushes. The brushes have a very high density of filling wires and are available in different widths. These brushes are used among other things to apply solvents and other cleansing agents.

Special Brushes
The brushes were manufactured according to our customers' specification and show variations, which are possible through our flexible manufacturing procedures.

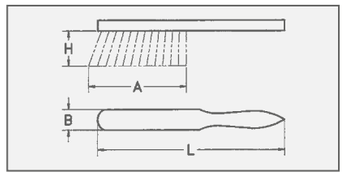

Special Models

Hand Brushes Rectangular and Violin
There are many filling wires in these stable universal brushes.

Hand Brushes with Bracket
The wooden body is pointed to the front end, the plastic bracket is nailed on. The model 140.901 has an adjustable stock board which enables an adjustment to brush firmness.

These special models are mainly ordered by our export customers.

Brushes for removing wet storage stain
Zinc coated surfaces are needed for corrosion protection. Often after the zinc coating of work parts, under wet conditions chemical reactions occur which cause wet storage stain. The special bronze wire allows the effective removal of white rust without smashing the zinc coating which has to be treated.

Radiator Brushes
This narrow, long shaped brush is ideal for hard to reach areas on heaters and radiators. The model 121.211 has a straight body, the other models have a curved body.

Staining Brushes
The treated wood is prepared with these staining brushes. By using fibre and bronze wire the brushes are insensitive against all normal
chemical based solutions. The model 144.211 has an adjustable stock board which enables an adjustment to brush firmness.
With the staining brushes 144.701 and 144.801 the surface after the staining process is polished by the leather insert strips. Any standing wood fibre is also smoothed.

File Cleaners
The brushes for cleaning wood and metal files are available in different sizes and with different file card. The file card is glued on to the wooden body.

File Card in Rolls
Various roughing-up tools can be manufactured with this material, which is also available in different sizes and filling materials. Available in meters or if required in single pieces.

Bricklayer's Brushes
For pre and retreatment of brickwork for painters and bricklayers. All models have a jute or plastic strap.

Plasterer's Brushes
These are for roughening and structuring of plaster. Body is made of beech wood, the steel pins are hardened.

Spiked Rollers
For use before the removal of wallpaper. The spiked roller perforates the paper allowing absorption of stripping solvent. The roller is of plastic with the steel pins obliquely arranged to ensure maximum efficiency in use. The handle can be made longer with customised telescopic handles. For safety the roller is supplied with a protective cover.

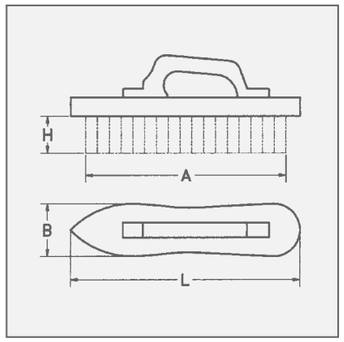

Item Nos. in bold are available ex stock.
Consider our minimum order value for *italic printed* article numbers (see page 148).

STA	= steel wire
STM	= brass coated steel
BRO	= bronze wire

PEFC/04-31-0389

We are accredited!

Special Hand Brushes

	Filling	Rows	L	B	A	H	Pack.	Art.-No.
	Hand Brushes Rectangular and Violin		mm | *inch*	mm | *inch*	mm | *inch*	mm | *inch*		
1	**STA** straight 0.35 | *0.014"*	6 x 19	185 | *7 1/4*	57 | *2 1/4*	175 | *7*	30 | *1 1/4*	12	**140.201**
2	**STA** straight 0.35 | *0.014"*	5	200 | *8*	60 | *2 3/8*	190 | *7 1/2*	35 | *1 1/2*	16	**141.231**
3	**STM** straight 0.35 | *0.014"*	5	200 | *8*	55 | *2 1/4*	170 | *6 5/8*	40 | *1 3/8*	36	*140.641*
	Hand Brushes with Bracket							
4	**STA** straight ca. 0.35 | *0.014"*	5	225 | *9*	55 | *2 1/4*	200 | *8*	38 | *1 1/2*	16	**140.901***
5	**STM** crimped 0.35 | *0.014"*	5	225 | *9*	55 | *2 1/4*	200 | *8*	38 | *1 1/2*	16	**140.811**
	Hand Brushes with Strap							
6	**STA** straight 0.50 | *0.020"*	7	200 | *8*	70 | *2 3/4*	185 | *7 1/4*	35 | *1 1/2*	12	**141.421**
	Hand Brushes for removing wet storage stain							
7	**BRO** crimped 0.08 | *0.003"*	11 x 18	120 | *4 3/4*	70 | *2 3/4*	110 | *4 3/8*	14 | *4/7*	4	**152.811**

* with adjustable board

Special Models

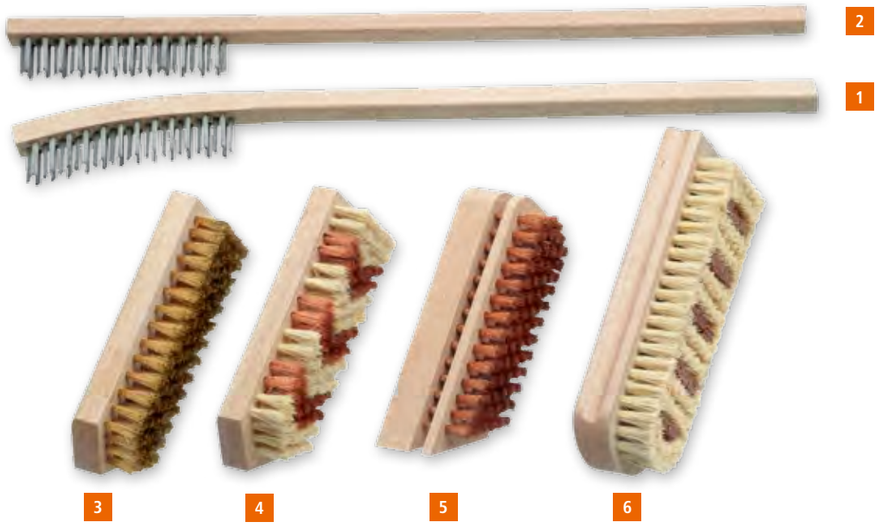

Radiator Brushes

	Filling	Rows	L mm | *inch*	B mm | *inch*	A mm | *inch*	H mm | *inch*	Pack.	Art.-No.
1	**STA** straight 0.25 | *0.010"*	3 x 13	420 | *16 1/2*	20 | *3/4*	115 | *4 1/2*	20 | *3/4*	12	**121.111***
2	**STA** straight 0.25 | *0.010"*	3 x 13	420 | *16 1/2*	20 | *3/4*	115 | *4 1/2*	20 | *3/4*	12	**121.211****

Staining Brushes

	Filling	Rows	L mm | *inch*	B mm | *inch*	A mm | *inch*	H mm | *inch*	Pack.	Art.-No.
3	**MES** crimped 0.15 | *0.006"*	7	150 | *6*	50 | *2*	140 | *5 1/2*	20 | *3/4*	12	**144.001**
	BRO crimped 0.15 | *0.006"*	7	150 | *6*	50 | *2*	140 | *5 1/2*	20 | *3/4*	12	**144.011**
4	**BRO** 0.15 | *0.006"* / **FIB**	7	150 | *6*	50 | *2*	140 | *5 1/2*	20 | *3/4*	12	**144.021**
	BRO crimped 0.15 | *0.006"*	7	180 | *7*	60 | *2 3/8*	170 | *6 5/8*	20 | *3/4*	12	**144.111**
	BRO 0.15 | *0.006"* / **FIB**	7	180 | *7*	60 | *2 3/8*	170 | *6 5/8*	20 | *3/4*	12	**144.121**
5	**BRO** crimped 0.15 | *0.006"*	6	150 | *6*	50 | *2*	130 | *5 1/8*	20 | *3/4*	12	**144.211*****
	BRO crimped 0.15 | *0.006"*	6	150 | *6*	50 | *2*	130 | *5 1/8*	15 | *5/8*	12	**144.311**
	BRO crimped 0.15 | *0.006"*	6	180 | *7*	60 | *2 3/8*	160 | *6 3/8*	15 | *5/8*	12	**144.411**
6	**Leather + FIB**	3/7	175 | *6 7/8*	60 | *2 3/8*	160 | *6 3/8*	20 | *3/4*	12	**144.701**
	Leather + FIB	4/9	203 | *8*	72 | *2 7/8*	190 | *7 1/2*	20 | *3/4*	12	**144.801**

* Wooden body curved | ** Wooden body straight | *** with adjustable board

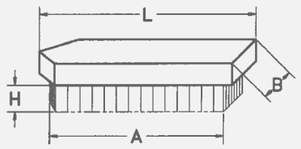

Item Nos. in bold are available ex stock.
Consider our minimum order value for *italic printed* article numbers (see page 139).

STA	= steel wire
ROF	= stainless steel wire
MES	= brass wire
BRO	= bronze wire
PP	= polypropylene
FIB	= fibre

to page 89

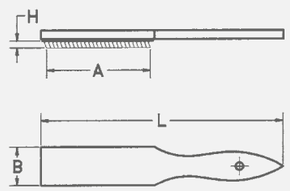

File Cleaners / Roughering Brushes

	File Cards	L mm | *inch*	B mm | *inch*	A mm | *inch*	Pack.	Art.-No.
1	**STA** 0.30 | *0.012"*	210 | *8 1/4*	25 | *1*	100 | *4*	12	**037.101**
	STA 0.30 | *0.012"*	250 | *10*	40 | *1 3/8*	115 | *4 1/2*	12	**037.201**
	STA 0.30 | *0.012"*	250 | *10*	40 | *1 3/8*	115 | *4 1/2*	100	**037.200**
	ROF 0.30 | *0.012"*	250 | *10*	40 | *1 3/8*	115 | *4 1/2*	12	**037.221**
2	**ROF** 0.60	170 | *6 3/4*	30 | *1 1/4*	24 | *1*	20	**037.710**

3 File Cards

Filling, without interval	STA 0,30 width 25 Art.-No.	STA 0,30 width 38 Art.-No.	STA 0,30 width 51 Art.-No.	ROF 0,30 width 38 Art.-No.
	000.311*	**000.321***	**000.331***	**000.323***

Bricklayer's Brushes with Strap

	Filling	Rows	L mm | *inch*	B mm | *inch*	A mm | *inch*	H mm | *inch*	Pack.	Art.-No.
4	**STA** straight 0.25 | *0.010"*	9	210 | *8 1/4*	100 | *4*	200 | *8*	35 | *1 1/2*	12	**142.101**
5	**MES** crimped 0.20 | *0.008"* / **PP**	9	210 | *8 1/4*	95 | *3 3/4*	200 | *8*	20 | *3/4*	12	**142.211****

Plasterer's Brushes

	Filling	L mm | *inch*	B mm | *inch*	A mm | *inch*	H mm | *inch*	Pack.	Art.-No.
6	86 steel Pins hardend	190 | *7 1/2*	97 | *3 3/4*	165 | *6 1/2*	16 | *5/8*	12	**061.101**

7 Spiked Rollers

Filling	Rows	L mm | *inch*	B mm | *inch*	A mm | *inch*	H mm | *inch*	Pack.	Art.-No.
steel Pins on plastic roller, with Protective Cover	12	290 | *11 3/8*	25 | *1*	148 | *5 7/8*	7 | *1/4*	10	**064.050**

* Please indicate length. | ** Wooden body varnished

Brooms and Scrubs

Brooms and Scrubs
Brooms and Scrubs for the use in all industrial companies and craftsman's establishments.

The shown brooms and scrubs are the best selling models.

The brooms with flat steel wire 1.80 x 0.45 mm make the so called broom lines on cement floors thus receiving a rough surface.

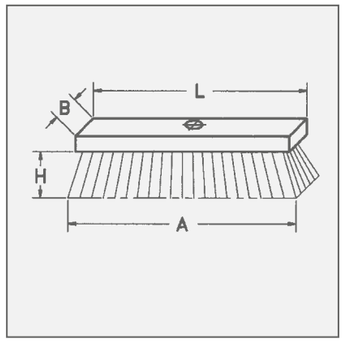

Item Nos. in bold are available ex stock.
Consider our minimum order value for *italic printed* article numbers (see page 148).

STA = steel wire
ROF = stainless steel wire
MES = brass wire

PEFC/04-31-0389

We are accredited!

1 Brooms Flat Wooden Stock, with Handle Hole 23 Ø

Filling	Rows	L mm | *inch*	B mm | *inch*	A mm | *inch*	H mm | *inch*	Pack.	Art.-No.
STA straight 0.50 | *0.020"*	5 x 16/17	250 | *10*	60 | *2 3/8*	270 | *10 5/8*	70 | *2 3/4*	12	**147.101**
STA straight 0.50 | *0.020"*	5 x 20	300 | *12*	60 | *2 3/8*	330 | *13*	70 | *2 3/4*	12	**147.401**
STA straight 0.50 | *0.020"*	6 x 20/21	300 | *12*	70 | *2 3/4*	330 | *13*	70 | *2 3/4*	12	**147.201**
STA straight 0.50 | *0.020"*	6 x 20/21	300 | *12*	70 | *2 3/4*	330 | *13*	70 | *2 3/4*	42	**147.200**
ROF straight 0.50 | *0.020"*	6 x 20	300 | *12*	70 | *2 3/4*	330 | *13*	70 | *2 3/4*	12	**147.261**
STA straight 0.50 | *0.020"*	6 x 23	350 | *14*	70 | *2 3/4*	390 | *15 3/8*	70 | *2 3/4*	12	**147.301**

2 Brooms Raised Wooden Stock, with Handle Hole 23 Ø

Filling	Rows	L mm | *inch*	B mm | *inch*	A mm | *inch*	H mm | *inch*	Pack.	Art.-No.
STA straight 0.50 | *0.020"*	5 x 16/17	250 | *8 1/4*	60 | *2 3/8*	270 | *10 5/8*	70 | *2 3/4*	12	**146.101**
STA straight 0.50 | *0.020"*	6 x 20/21	300 | *12*	70 | *2 3/4*	330 | *13*	70 | *2 3/4*	12	**146.201**
STA flach 1.80 x 0.45	6 x 20/21	300 | *12*	70 | *2 3/4*	330 | *13*	70 | *2 3/4*	12	**146.241**
STA straight 0.50 | *0.020"*	6 x 23/24	350 | *14*	70 | *2 3/4*	390 | *15 3/8*	70 | *2 3/4*	12	**146.301**
STA flat 1.80 x 0.45	6 x 23/24	350 | *14*	70 | *2 3/4*	390 | *15 3/8*	70 | *2 3/4*	12	**146.341**

3 Scrubs, with Handle Hole 23 Ø

Filling	Rows	L mm | *inch*	B mm | *inch*	A mm | *inch*	H mm | *inch*	Pack.	Art.-No.
STA straight 0.35 | *0.014"*	6 x 16/17	220 | *8 5/8*	60 | *2 3/8*	225 | *9*	35 | *1 1/2*	12	**148.101**
ROF straight 0.35 | *0.014"*	6 x 16/17	220 | *8 5/8*	60 | *2 3/8*	225 | *9*	35 | *1 1/2*	12	**148.161**
MES crimped 0.25 | *0.010"*	6 x 16/17	220 | *8 5/8*	60 | *2 3/8*	225 | *9*	25 | *1*	12	**148.141**
STA straight 0.25 | *0.010"*	6 x 17/18	240 | *9 1/2*	70 | *2 3/4*	245 | *9 5/8*	35 | *1 1/2*	12	**148.201**
STA straight 0.40 | *0.016"*	7 x 15/16	230 | *9*	65 | *2 1/2*	220 | *8 5/8*	35 | *1 1/2*	12	**148.601***

* Wooden body curved

Dusters

Dusters
Depending on the surrounding and application area, dusters are available in various models and with various filling materials. For coarse and light adherent dirt, dusters with wire filament are ideal.

Next to horse hair we offer dusters with coco filament as a good value alternative.

The duster with polyprophylene filament (straight plastic fibre) can be cleaned easily and therefore other surfaces do not get dirty. Since the water absorption of polypropylene is very low, the duster can be used also under wet conditions.

Further models in special execution with different filling materials and trim length available.

Dusters custom-made
Beside the mentioned models we provide special models with filling material and trim length according to your requirements.

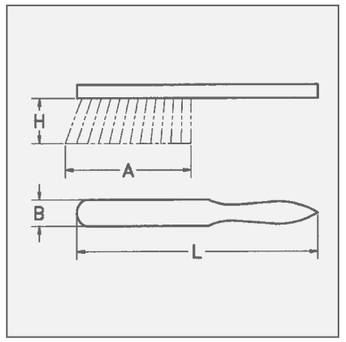

Item Nos. in bold are available ex stock.
Consider our minimum order value for *italic printed* article numbers (see page 148).

STA	= steel wire
MES	= brass wire
PP	= polyprophylene
ROS	= horse hair

PEFC/04-31-0389

We are accredited!

Dusters

		Filling	Rows	L mm | *inch*	B mm | *inch*	A mm | *inch*	H mm | *inch*	Pack.	Art.-No.
	3	**STA** straight 0.25 | *0.010"*	4	320 | *12 1/2*	35 | *1 1/2*	150 | *6*	60 | *2 3/8*	12	**124.101**
	2	**MES** crimped 0.25 | *0.010"*	4	320 | *12 1/2*	35 | *1 1/2*	150 | *6*	40 | *1 3/8*	12	**124.121**
	1	**coco**	4	280 | *11*	40 | *1 3/8*	160 | *6 3/8*	70 | *2 3/4*	12	**124.201**
	4	**coco**	4	430 | *17*	40 | *1 3/8*	165 | *6 1/2*	70 | *2 3/4*	20	**124.401**
	5	**ROS**	6	300 | *12*	43 | *1 3/4*	165 | *6 1/2*	50 | *2*	20	**124.301***
EAN	6	**PP**	4	320 | *12 1/2*	35 | *1 1/2*	175 | *6 7/8*	70 | *2 3/4*	12	**124.801**

* Wooden body varnished

Weed Brushes and Weed Brooms

Weed Brush
This brush with V shaped filling material is ideal for the removal of moss and weeds in joints and edges on pavements, courtyards or cobbled areas.

Due to the long handle an ergonomic and effective working is possible. Without stooping, your back is preserved, though it is possible to remove weeds aggressively and precisely.

The brush with set filling material allows a cleaning of edges and joints which are hard to reach.

Weed Broom
As well as the weed brush, the weed broom is a brush for outdoors.
Ideally moss and weeds can be removed from terrace boards or cobblestones. An easy and clean working without stooping makes the brush to an effective broom with depth effects. High quality, with brass coated steel wires guarantee a long lifetime of the brush in the well known LESSMANN quality „Made in Germany".

All standard hand brushes have a bar code stamp and LESSMANN-imprint.

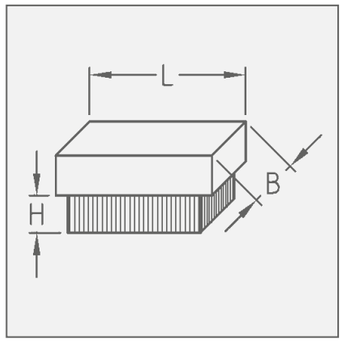

Displaybox

Item Nos. in bold are available ex stock.
Consider our minimum order value for *italic printed* article numbers (see page 148).

STA = steel wire
STM = brass coated steel

EAN

Weed Brushes, with Handle Hole 23 Ø

	Filling	L mm | *inch*	B mm | *inch*	H mm | *inch*	Rows	Pack.	Art.-No.
	without handle						
1	**STA** 0.35 | *0.014"*	100 | *4*	35 | *1 1/2*	36 | *1 1/2*	3	25	**151.108**
2	**STM** 0.35 | *0.014"* Filling set in working direction	100 | *4*	35 | *1 1/2*	36 | *1 1/2*	3	25	**151.511**
3	**STA** 0.35 | *0.014"* with scraper	100 | *4*	35 | *1 1/2*	42 | *1 5/8*	3	25	**151.109**
	with handle, 1400 mm long, Ø 28 mm, incl. Displaybox						
4	**STA** 0.35 | *0.014"*	100 | *4*	35 | *1 1/2*	36 | *1 1/2*	3	30	*151.991.07**
	STM 0.35 | *0.014"* Filling set in working direction	100 | *4*	35 | *1 1/2*	36 | *1 1/2*	3	30	*151.995.07**

EAN

Weed Broom, with Handle Hole 23 Ø

	Filling	L mm | *inch*	B mm | *inch*	H mm | *inch*	Rows	Pack.	Art.-No.
	without handle						
5	**STM** 0.50 | *0.020"*	140 | *5 1/2*	60 | *2 3/8*	70/60 | *2 3/4 / 2 3/8*	10/9	16	**152.510**
	with handle, 1400 mm long, Ø 28 mm, incl. Displaybox						
	STM 0.50 | *0.020"*	140 | *5 1/2*	60 | *2 3/8*	70/60 | *2 3/4 / 2 3/8*	10/9	12	**152.995.07***

* Delivery only in full packaging units.

LESSMANN®
THE GERMAN BRUSH COMPANY

INTERIOR BRUSHES

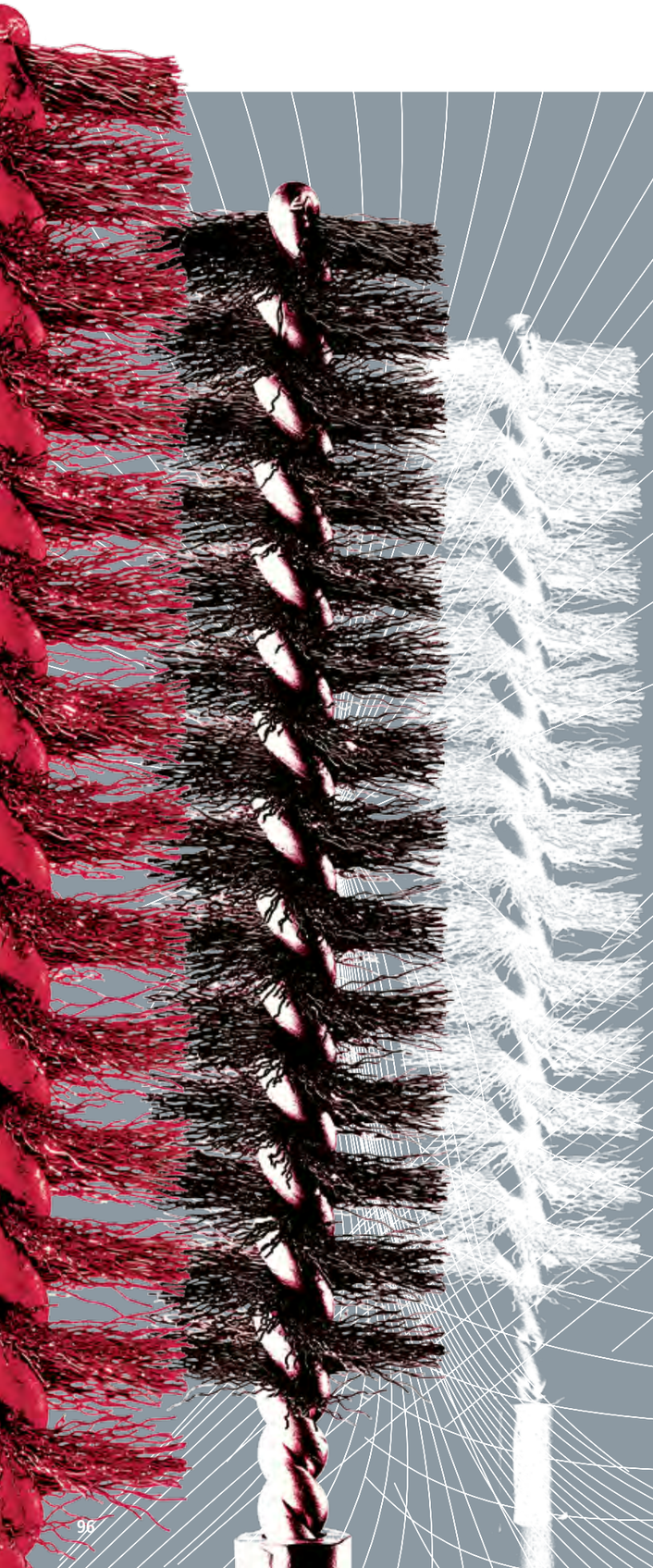

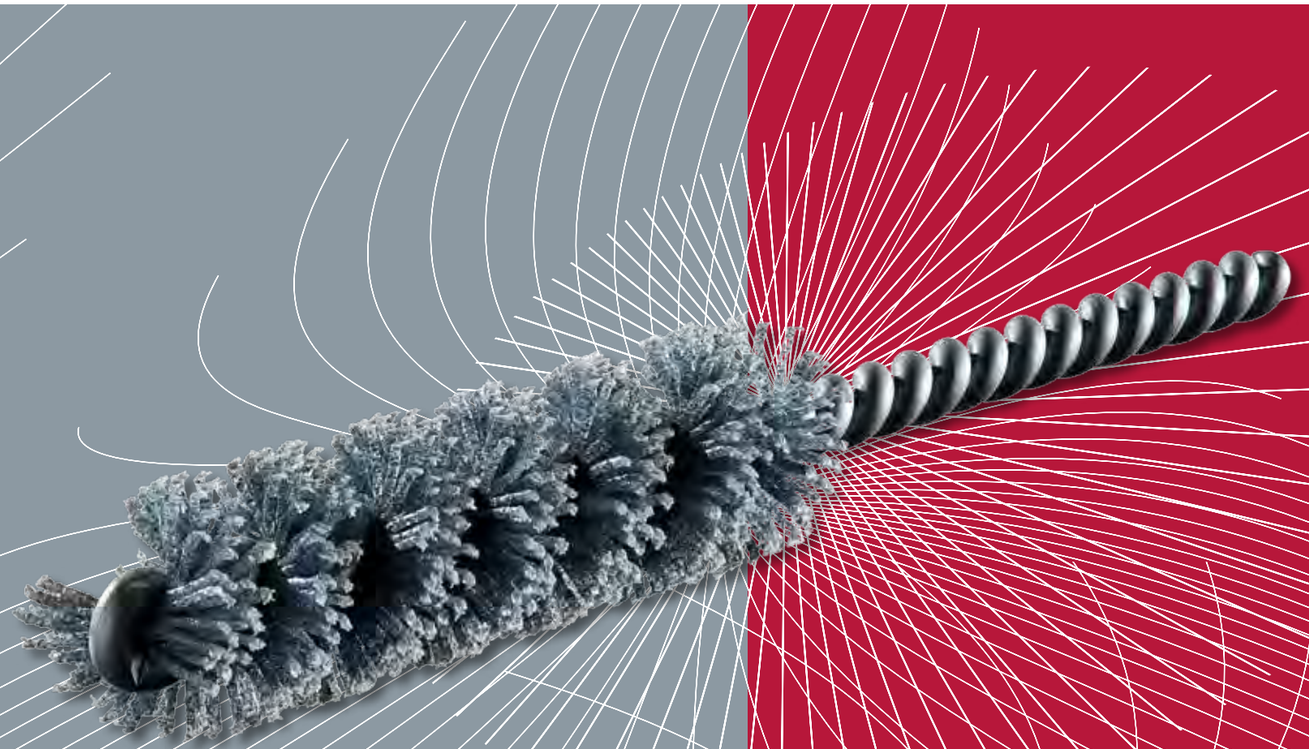

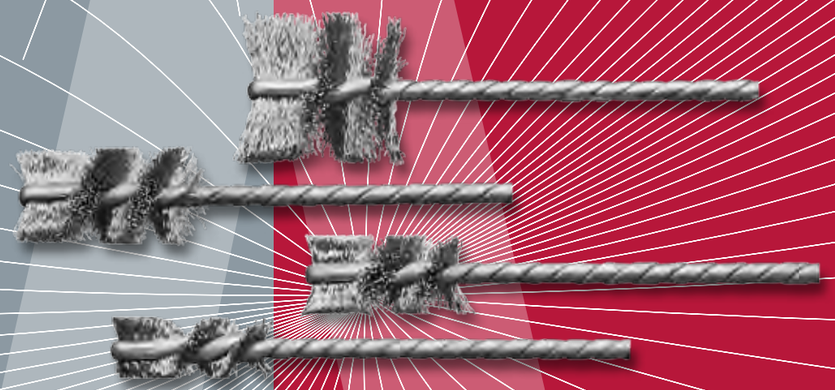

Micro Interior Brushes

Interior brushes with zinc coated twisted wire and single spiral
Due to the filling of aluminium oxide or silicon carbide their usage is more flexible than with conventional interior brushes.

Interior brushes with abrasive filaments are usually used for deburring bores, cross bores, o-ring recesses and for polishing and cleaning small bores.

Due to the flexible surface of the bristles the interior brushes suit to the contour of the bore and areas which are hard to reach can be treated. Abrasive bristles also have grinding effects on the side. That allows a rounding of the edges also on cross bores.

Also brushes with **diamond** filling are available, that causes an even more aggressive surface of the brush.

Micro Interior Brushes, Steel Wire
Micro interior brushes with steel wire are used as thread brushes for descaling, deburring or cleaning:
- Cross corners
- Crossovers
- Tap holes
- Slots

The brushes can be used either manually or mechanically.

Please do not hesitate to contact us, we will also find for special applications a compatible solution. Due to a fully automated production, LESSMANN offers high quality to reasonable prices.

Mechanical Application
Only use the brush with the indicated maximal peripheral speed (RPM max.). The max. RPM only is allowed when the brush is clamped min. for 10 mm into the tool. When the brush is inserted into the suitable work piece, higher RPMs are possible. Only use the brush right rotating.

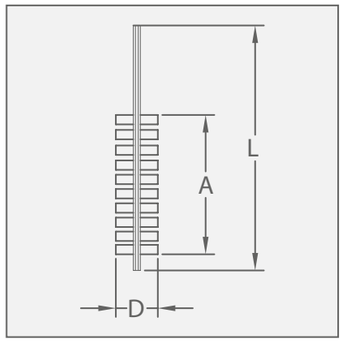

Item Nos. in bold are available ex stock.
Consider our minimum order value for *italic printed* article numbers (see page 148).

AO = aluminium oxide bristles

Stainless Steel Brushes
Information on working on stainless steel you find at www.lessmann.com

Mikro Interior Brushes are also available with special contours, e.g. **layered cut.**

Please ask for our special leaflet „Interior Brushes".

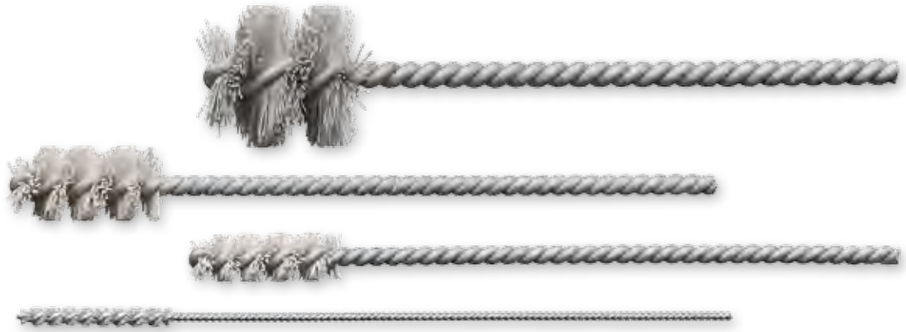

Microabrasive Interior Brushes IBE, Aluminum Oxide Bristles

D mm | *inch*	L mm | *inch*	A mm | *inch*	Shank Ø mm | *inch*	RPM max.	Pack.	AO 600/0.30 Art.-No.	AO 1000/0.25 Art.-No.
3.2 | *1/8*	125 | *5*	25 | *1*	1.5 | *1/16*	800	10	**541.084**	*540.067*
4.2 | *11/64*	125 | *5*	25 | *1*	2.2 | *3/32*	1,000	10	**541.045**	*540.068*
4.8 | *3/16*	125 | *5*	25 | *1*	2.2 | *3/32*	1,000	10	**541.083**	*540.069*
5.5 | *7/32*	125 | *5*	25 | *1*	2.2 | *3/32*	1,000	10	**541.079**	*540.070*
6.6 | *17/64*	125 | *5*	25 | *1*	2.5 | *3/32*	1,000	10	**541.037**	*540.071*
8.2 | *21/64*	125 | *5*	25 | *1*	3.2 | *1/8*	2,000	10	**541.076**	*540.072*
9.8 | *25/64*	125 | *5*	25 | *1*	3.2 | *1/8*	2,000	10	**541.077**	*540.073*
11.5 | *29/64*	125 | *5*	25 | *1*	3.7 | *5/32*	2,000	10	**541.085**	*540.074*
13 | *33/64*	125 | *5*	25 | *1*	3.7 | *5/32*	2,000	10	**541.087**	*540.075*
17.5 | *11/16*	125 | *5*	25 | *1*	4.7 | *3/16*	2,000	10	**541.039**	
16 | *5/8*	125 | *5*	25 | *1*	3.7 | *5/32*	2,000	10	**541.089**	*540.076*
20 | *51/64*	125 | *5*	25 | *1*	4.7 | *3/16*	2,000	10	**541.093**	*540.077*
25 | *1*	125 | *5*	25 | *1*	4.7 | *3/16*	2,000	10	**541.095**	*540.078*

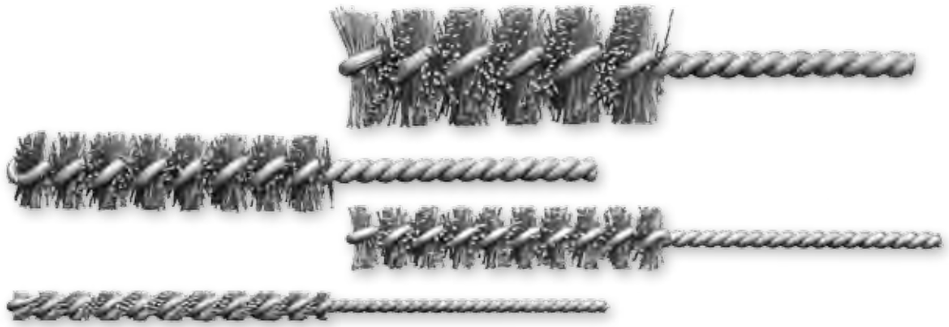

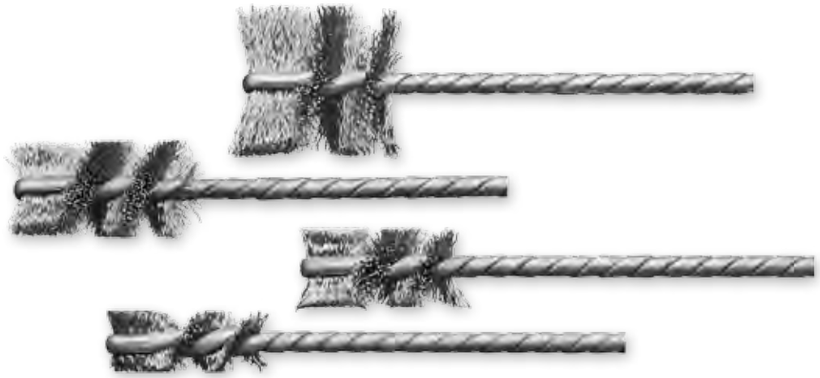

Microabrasive Interior Brushes IBE, Silicon Carbide Bristles

D mm | *inch*	L mm | *inch*	A mm | *inch*	Shank Ø mm | *inch*	RPM max.	Pack.	**SIC 120/0.6** Art.-No.	**SIC 320/0.6** Art.-No.	**SIC 1000/0.25** Art.-No.
1.2 | *3/64*	100 | *4*	12 | *15/32*	0.7 | *1/32*	500	10			**545.200.12***
1.9 | *5/64*	100 | *4*	18 | *45/64*	0.7 | *1/32*	500	10			**545.200.19**
2.2 | 3/32	100 | *4*	18 | *45/64*	0.9 | *1/32*	1,000	10			**545.200.22**
2.6 | *7/64*	100 | *4*	25 | *1*	1.0 | *3/64*	1,000	10			**545.200.26**
3.2 | *1/8*	100 | *4*	25 | *1*	1.7 | *1/16*	1,000	10			**545.200.32**
4.2 | *11/64*	125 | *5*	25 | *1*	2.2 | *3/32*	1,000	10		*543.200.42*	**545.200.42**
5.5 | *7/32*	125 | *5*	25 | *1*	2.2 | *3/32*	1,000	10			**545.200.55**
6 | *15/64*	125 | *5*	65 | *2 9/16*	3.0 | *1/8*	1,500	10	**541.200.60**	**543.200.60**	*545.200.60*
8 | *5/16*	125 | *5*	65 | *2 9/16*	3.0 | *1/8*	1,500	10	**541.200.80**	**543.200.80**	*545.200.80*
10 | *25/64*	125 | *5*	65 | *2 9/16*	3.7 | *9/64*	2,000	10	**541.201.00**	**543.201.00**	*545.201.00*
13 | *33/64*	125 | *5*	65 | *2 9/16*	3.7 | *9/64*	2,000	10	**541.201.30**	**543.201.30**	*545.201.30*
16 | *5/8*	125 | *5*	65 | *2 9/16*	5.2 | *13/64*	2,000	10	**541.201.60**	**543.201.60**	*545.201.60*
19 | *3/4*	125 | *5*	65 | *2 9/16*	5.2 | *13/64*	2,000	10	**541.201.90**	**543.201.90**	*545.201.90*
20 | *51/64*	125 | *5*	65 | *2 9/16*	5.7 | *7/32*	2,000	10	**541.202.00**		
22 | *7/8*	125 | *5*	65 | *2 9/16*	5.7 | *7/32*	2,000	10	**541.202.20**	**543.202.20**	*545.202.20*
25 | *1*	125 | *5*	65 | *2 9/16*	5.7 | *7/32*	2,000	10	**541.202.50**	**543.202.50**	*545.202.50*
28 | *1 7/64*	125 | *5*	65 | *2 9/16*	5.7 | *7/32*	2,000	10	**541.202.80**	**543.202.80**	*545.202.80*
30 | *1 3/16*	125 | *5*	65 | *2 9/16*	5.7 | *7/32*	2,000	10	**541.203.00**	**543.203.00**	*545.203.00*
32 | *1 17/64*	125 | *5*	65 | *2 9/16*	5.7 | *7/32*	2,000	10	**541.203.20**	*543.203.20*	*545.203.20*
38 | *1 1/2*	125 | *5*	65 | *2 9/16*	5.7 | *7/32*	2,000	10	**541.203.80**		

* Type IB: with straight / clipped off point

Mechanical Application
Only use the brush with the indicated maximal peripheral speed (RPM max.). The max. RPM only is allowed when the brush is clamped min. for 10 mm into the tool. When the brush is inserted into the suitable work piece, higher RPMs are possible. Only use the brush right rotating.

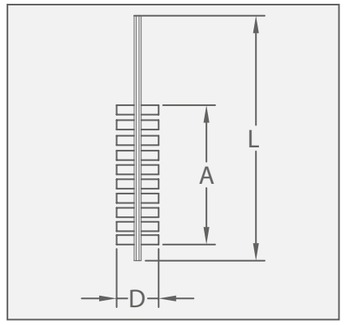

Item Nos. in bold are available ex stock.
Consider our minimum order value for *italic printed* article numbers (see page 148).

STH = steel wire, high tensile, straight
ROH = stainless steel wire, high tensile
MES = brass wire
PA = polyamide
SIC = silicon carbide bristles

Micro Interior Brushes IBH, Steel Wire, Stainless Steel Wire

D mm | *inch*	L mm | *inch*	A mm | *inch*	Shank Ø mm | *inch*	RPM max.	Pack.	**STH 0.12** | *0.005"* Art.-No.	**STH 0.20** | *0.008"* Art.-No.	**ROH 0.12** | *0.005"* Art.-No.	**ROH 0.20** | *0.008"* Art.-No.
6 | *15/64*	90 | *3 1/2*	25 | *1*	3.2 | *1/8*	3,500	10	**564.220.60**			
8 | *5/16*	90 | *3 1/2*	25 | *1*	3.2 | *1/8*	3,500	10	**564.220.80**			
10 | *25/64*	90 | *3 1/2*	25 | *1*	3.8 | *5/32*	3,500	10	**565.321.00**	**565.341.00**	**565.521.00**	
13 | *33/64*	90 | *3 1/2*	25 | *1*	3.8 | *5/32*	3,500	10	**565.321.30**	**565.341.30**	**565.521.30**	
16 | *5/8*	90 | *3 1/2*	25 | *1*	3.8 | *5/32*	3,000	10	**565.321.60**	**565.341.60**	**565.521.60**	*565.541.60*
19 | *3/4*	90 | *3 1/2*	25 | *1*	3.8 | *5/32*	3,000	10	**565.321.90**	**565.341.90**	*565.521.90*	*565.541.90*
20 | *51/64*	90 | *3 1/2*	25 | *1*	3.8 | *5/32*	3,000	10		*565.432.00*		**565.542.00**
21 | *53/64*	90 | *3 1/2*	25 | *1*	3.8 | *5/32*	3,000	10	*565.322.10*	*565.342.10*		
24 | *15/16*	90 | *3 1/2*	25 | *1*	3.8 | *5/32*	3,000	10	*565.322.40*			
25 | *1*	90 | *3 1/2*	25 | *1*	3.8 | *5/32*	3,000	10	**565.322.50**	**565.342.50**	565.522.50	**565.542.50**
29 | *1 9/64*	90 | *3 1/2*	25 | *1*	3.8 | *5/32*	3,000	10	*565.322.90*	*565.342.90*		*565.542.90*
32 | *1 17/64*	90 | *3 1/2*	25 | *1*	3.8 | *5/32*	3,000	10	*565.323.20*	*565.343.20*		*565.543.20*

Micro Interior Brushes IBH, Brass Wire and Polyamide

D mm | *inch*	L mm | *inch*	A mm | *inch*	Shank Ø mm | *inch*	RPM max.	Pack.	**MES 0.15** | *0.006"* Art.-No.	**MES 0.20** | *0.008"* Art.-No.	**PA 0.30** | *0.012"* Art.-No.
8 | *5/16*	90 | *3 1/2*	25 | *1*	3.2 | *1/8*	3,500	10	*565.730.80*		
10 | *25/64*	90 | *3 1/2*	25 | *1*	3.8 | *5/32*	3,500	10	**565.731.00**		**565.061.00**
13 | *33/64*	90 | *3 1/2*	25 | *1*	3.8 | *5/32*	3,500	10	**565.731.30**		**565.061.30**
16 | *5/8*	90 | *3 1/2*	25 | *1*	3.8 | *5/32*	3,000	10	**565.731.60**		**565.061.60**
20 | *51/64*	90 | *3 1/2*	25 | *1*	3.8 | *5/32*	3,000	10		**565.742.00**	**565.062.00**
25 | *1*	90 | *3 1/2*	25 | *1*	3.8 | *5/32*	3,000	10		**565.742.50**	**565.062.50**

Cylinder Brushes

Cylinder Brushes
For manual cleaning and deburring of tubes, bores etc. Cylinder brushes are also available in other dimensions and materials. When ordering special sizes please mention full specification: total length, filling length, filling material, diameter and quantity.

Cylinder brushes, flat filament
These flat brushes with fine, crimped steel wire are ideal for cleaning areas which are hard to reach. A typical application is removing isolation rests in channels of stators or electric motors.

Stainless Steel Brushes
Information on working on stainless steel you find at www.lessmann.com

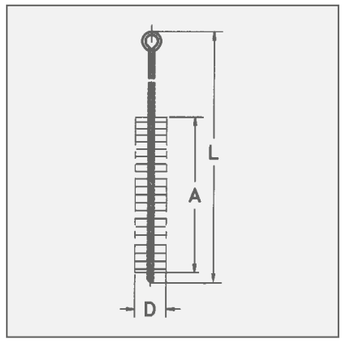

Item Nos. in bold are available ex stock.
Consider our minimum order value for *italic printed* article numbers (see page 139).

STA = steel wire
ROF = stainless steel wire
MES = brass wire
PA = polyamide

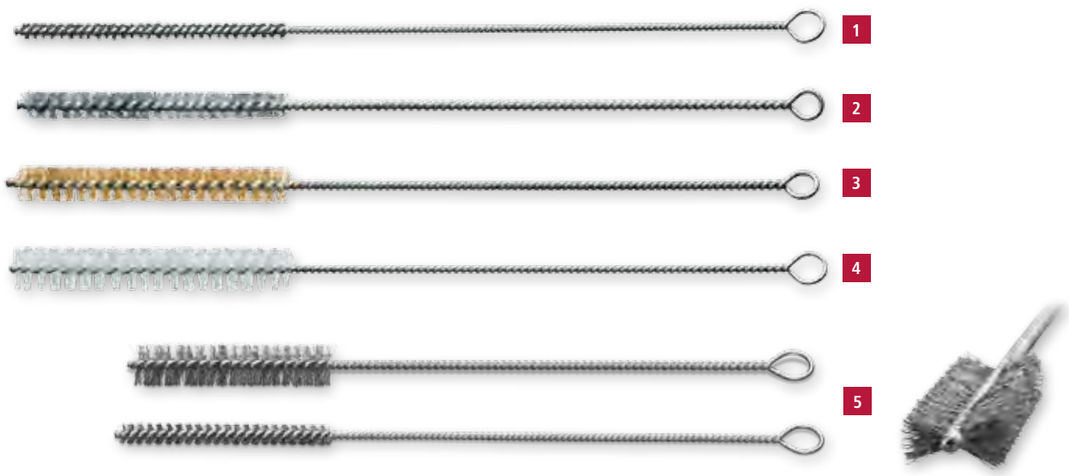

Cylinder Brushes with Loop IBZ

D mm | *inch*	L mm | *inch*	A mm | *inch*	Pack.	1 STA Art.-No.	2 ROF Art.-No.	3 MES Art.-No.	4 PA Art.-No.
3 | *1/8*	300 | *12*	100 | *4*	10	**542.381**	**542.541**	**542.741**	**542.881**
4 | *5/32*	300 | *12*	100 | *4*	10	**542.351**	**542.508**	**542.740**	**542.823**
5 | *13/64*	300 | *12*	100 | *4*	10	**542.347**	**542.538**	**542.739**	**542.822**
6 | *15/64*	300 | *12*	100 | *4*	10	**542.301**	**542.501**	**542.701**	**542.801**
8 | *5/16*	300 | *12*	100 | *4*	10	**542.302**	**542.502**	**542.702**	**542.802**
10 | *25/64*	300 | *12*	100 | *4*	10	**542.303**	**542.503**	**542.703**	**542.803**
12 | *15/32*	300 | *12*	100 | *4*	10	**542.304**	**542.504**	**542.704**	**542.804**
13 | *33/64*	300 | *12*	100 | *4*	10	**542.305**	available on demand	**542.705**	available on demand
14 | *9/16*	300 | *12*	100 | *4*	10	**542.306**	*542.506*	**542.706**	**542.812**
15 | *19/32*	300 | *12*	100 | *4*	10	**542.307**	**542.507**	**542.707**	**542.807**
18 | *45/64*	300 | *12*	100 | *4*	10	**542.309**	available on demand	**542.709**	**542.818**
20 | *51/64*	300 | *12*	100 | *4*	10	**542.311**	**542.511**	**542.711**	**542.811**
25 | *1*	300 | *12*	100 | *4*	10	**542.313**	**542.513**	**542.713**	**542.813**
30 | *1 3/16*	300 | *12*	100 | *4*	10	**542.315**	**542.515**	**542.715**	**542.815**
40 | *1 5/8*	300 | *12*	100 | *4*	10	**542.319**	*542.519*	**542.719**	**542.819**
50 | *2*	300 | *12*	100 | *4*	10	**542.320**	*542.520*	**542.720**	**542.820**

5 Cylinder brushes, flat filament with Loop IBZ

D mm | *inch*	L mm | *inch*	A mm | *inch*	Pack.	STA 0,15 Art.-No.	STA 0,20 Art.-No.
4 x 10 | *5/32 x 25/64*	350 | 14	100 | *4*	10	**559.810**	
7 x 10 | 9/32 x 25/64	350 | 14	100 | *4*	10	**559.806**	
8 x 12 | 5/16 x 15/32	350 | 14	100 | *4*	10		**559.802**
8 x 15 | 5/16 x 19/32	350 | 14	100 | *4*	10		**559.803**
10 x 18 | 25/64 x 45/64	350 | 14	100 | *4*	10		**559.804**
10 x 22 | 25/64 x 7/8	350 | 14	100 | *4*	10		**559.805**
12 x 26 | 15/32 x 1 *1/32*	350 | 14	100 | *4*	10		**559.807**

Hole Cleaning Brushes

Hole cleaning Brushes with Wooden Handle IBM

	D mm | *inch*	L mm | *inch*	A mm | *inch*	Pack.	1 STA Art.-No.	2 ROF Art.-No.	3 MES Art.-No.
	10 | *25/64*	300 | *12*	100 | *4*	10	**560.310**	**560.510**	**560.710**
	15 | *19/32*	300 | *12*	100 | *4*	10	**560.315**	**560.515**	**560.715**
	20 | *51/64*	300 | *12*	100 | *4*	10	**560.320**	**560.520**	**560.720**
	25 | *1*	300 | *12*	100 | *4*	10	**560.325**	**560.525**	**560.725**
	30 | *1 3/16*	300 | *12*	100 | *4*	10	**560.330**	**560.530**	**560.730**
4	10/18 | *25/64 / 45/64*	200 | *8*	70 | *2 3/4*	10	**561.304***		

* conical filling

5 Cylinder Brushes with Shank 8 mm Ø IBG

D mm | *inch*	L mm | *inch*	A mm | *inch*	RPM max.	Pack.	STA Art.-No.
13 | *33/64*	200 | *8*	55 | *2 11/64*	1,000	10	**503.311**
20 | *51/64*	200 | *8*	55 | *2 11/64*	1,000	10	**503.313**
26 | *1 1/32*	200 | *8*	55 | *2 11/64*	800	10	**503.314**
32 | *1 17/64*	200 | *8*	55 | *2 11/64*	800	10	**503.316**
38 | *1 1/2*	200 | *8*	55 | *2 11/64*	800	10	**503.318**

Hole Cleaning Brushes
Those hole cleaning brushes have a wooden handle. Hence the brushes allow a very comfortable working in various application fields.

Typically the brushes are used in construction industry or handcraft business for cleaning bore holes or slots.

Besides, Hole Cleaning Brushes are ideal for cleaning threads or deburring cross holes.

The model 561.304 has the filling material conically cut.

Mechanical Application
Only use the brush with the indicated maximal peripheral speed (RPM max.). The max. RPM only is allowed when the brush is clamped min. for 10 mm into the tool. When the brush is inserted into the suitable work piece, higher RPMs are possible. Only use the brush right rotating.

Bore Hole Cleaning Brushes

Interior Brushes for bore hole cleaning IBE, Steel, without Thread

D mm | *inch*	L mm | *inch*	A mm | *inch*	Suitable for bore hole mm | *inch*	RPM max.	Pack.	STA 0.10 | *0.004"* Art.-No.	STA 0.15 | *0.006"* Art.-No.	STA 0.20 | *0.008"* Art.-No.
12 | *15/32*	130 | *5 1/8*	80 | *3*	10 | *25/64*	1,500	10	**504.301**		
14 | *9/16*	140 | *5 1/2*	80 | *3*	12 | *15/32*	1,500	10	**504.302**		
16 | *5/8*	180 | *7*	80 | *3*	14 | *9/16*	800	10		**504.333**	
20 | *51/64*	200 | *8*	100 | *4*	18 | *45/64*	800	10		**504.334**	
24 | *15/16*	220 | *8 5/8*	100 | *4*	22 | *7/8*	800	10		**504.335**	
26 | *1 1/32*	250 | *10*	100 | *4*	24 | *15/16*	500	10			**504.346**
28 | *1 7/64*	290 | *11 3/8*	100 | *4*	26 | *1 1/32*	500	10			**504.347**

Bore Hole Cleaning Brushes IBG, Stainless Steel, with Thread

D mm | *inch*	L mm | *inch*	A mm | *inch*	Suitable for bore hole mm | *inch*	Thread	Pack.	ROF 0.10 | *0.004"* Art.-No.	ROF 0.15 | *0.006"* Art.-No.	ROF 0.20 | *0.008"* Art.-No.
12 | *15/32*	130 | *5 1/8*	80 | *3*	10 | *25/64*	M 6	10	**504.501.06**		
14 | *9/16*	140 | *5 1/2*	80 | *3*	12 | *15/32*	M 6	10	**504.502.06**		
16 | *5/8*	180 | *7*	80 | *3*	14 | *9/16*	M 6	10		**504.533.06**	
20 | *51/64*	200 | *8*	100 | *4*	18 | *45/64*	M 6	10		**504.534.06**	
24 | *15/16*	220 | *8 5/8*	100 | *4*	22 | *7/8*	M 6	10		*504.535.06*	
26 | *1 1/32*	250 | *10*	100 | *4*	24 | *15/16*	M 6	10			*504.546.06*
28 | *1 7/64*	290 | *11 3/8*	100 | *4*	26 | *1 1/32*	M 6	10			*504.547.06*

Bore Hole Cleaning Brushes
These interior brushes are used in the mounting techniques. The brushes are ideal for cleaning bore holes in most different materials. Afterwards screws and anchors can be inserted easily in the bore hole.

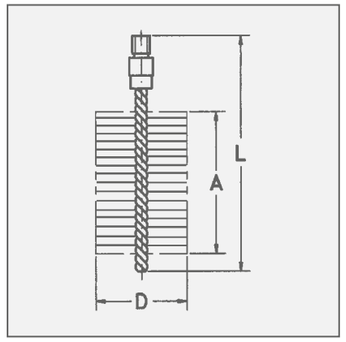

Item Nos. in bold are available ex stock.
Consider our minimum order value for *italic printed* article numbers (see page 148).

STA = steel wire
ROF = stainless steel wire
MES = brass wire

Tube and Sleeve Brushes

Interior Brushes
These brushes are varied for many different uses: not only for cleaning of tubes, gratings, sleeves and cylinders. Interior brushes regulate current velocity in tubing systems. They are similar to the double spiral tube brushes for deburring cross drillings etc. On these pages are shown standard brushes, single spiral having two drilling wires and the double spiral having four.

Sleeve Brushes
Sleeve brushes have a double spiral and are particularly stable types of tube brushes whose trimming is cut to a conical point. Used in machines they are beneficial for cleaning the sleeves (internal threads) of containers, e.g. after galvanisation.

Mechanical Application
Only use the brush with the indicated maximal peripheral speed (RPM max.). The max. RPM only is allowed when the brush is clamped min. for 10 mm into the tool. When the brush is inserted into the suitable work piece, higher RPMs are possible. Only use the brush right rotating.

Brushes with doublespiral
Brushes with a double spiral are mainly used for the treatment of larger diameters or for the treatment of hard materials. A double spiral is more stable and has a higher resistance against untwisting. Hence the brushes can be exposed to higher loads.

Stainless Steel Brushes
Information on working on stainless steel you find at www.lessmann.com

Special diameters
Minimum order € 125.00
Extra charge: Gross per piece
10 - 49 pcs + 50 %
50 - 99 pcs + 25 %
100 pcs and more + 10 %

Special threads under reserve
Extra charge: Gross per piece
10 - 19 pcs + € 5.00
20 - 49 pcs + € 4.00
50 - 99 pcs + € 3.00
100 pcs and more + € 2.00

For all brushes with thread M 6, M 10, W 1/2" and W 3/8" a practical hanger assembly is available for presenting the brushes individually. More information you find on page 125.

Suitable thread adapter,
see on page 115
Handles and Extension Pieces
see on page 115

On request tube brushes are also available with other measurements, other filling materials or other threads.

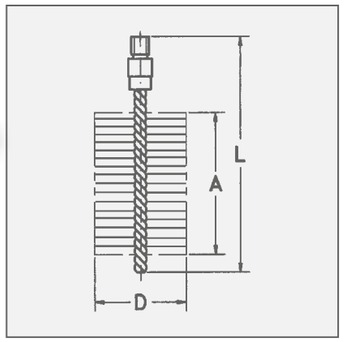

Item Nos. in bold are available ex stock.
Consider our minimum order value for *italic printed* article numbers (see page 148).

STA	= steel wire
ROF	= stainless steel wire
MES	= brass wire
PA	= polyamide
SIC	= silicon carbide bristles

Tube Brushes with external Thread IBG

D	L	A	Thread	RPM	Pack.	1 STA crimped	1 ROF crimped	2 MES crimped	3 PA straight
Single Spirale						Art.-No.	Art.-No.	Art.-No.	Art.-No.
mm | *inch*	mm | *inch*	mm | *inch*							
6 | *15/64*	115 | *4 1/2*	80 | *3*	M 4	2,000	10	**501.301**	**501.501**	**501.701**	**501.801**
8 | *5/16*	115 | *4 1/2*	80 | *3*	M 6	3,000	10	**500.308**	**500.508**	**500.708**	**500.808**
10 | *25/64*	115 | *4 1/2*	80 | *3*	M 6	3,000	10	**500.310**	**500.510**	**500.710**	**500.810**
12 | *15/32*	115 | *4 1/2*	80 | *3*	M 6	3,000	10	**500.312**	**500.512**	**500.712**	**500.812**
13 | *33/64*	115 | *4 1/2*	80 | *3*	M 6	3,000	10	**500.313**	**500.513**	**500.713**	**500.813**
14 | *9/16*	115 | *4 1/2*	80 | *3*	M 6	3,000	10	**500.314**	**500.514**	**500.714**	**500.814**
15 | *19/32*	115 | *4 1/2*	80 | *3*	M 6	3,000	10	**500.315**	**500.515**	**500.715**	**500.815**
16 | *5/8*	115 | *4 1/2*	80 | *3*	M 6	3,000	10	**500.316**	**500.516**	**500.716**	**500.816**
18 | *45/64*	115 | *4 1/2*	80 | *3*	M 6	3,000	10	**500.318**	**500.518**	**500.718**	**500.818**
19 | *3/4*	115 | *4 1/2*	80 | *3*	M 6	3,000	10	**500.319**	**500.519**	**500.719**	**500.819**
20 | *51/64*	115 | *4 1/2*	80 | *3*	M 6	3,000	10	**500.320**	**500.520**	**500.720**	**500.820**

4 Interior Brushes with external thread IBG, Silicon Carbid Bristles

D	L	A	Thread	RPM	Pack.	SIC 180/0.9
Single Spirale						Art.-No.
mm | *inch*	mm | *inch*	mm | *inch*				
10 | *25/64*	115 | *4 1/2*	80 | *3*	M 6	4,000	10	*500.010*
16 | *5/8*	115 | *4 1/2*	80 | *3*	M 6	4,000	10	*500.016*
20 | *51/64*	150 | *6*	100 | *4*	W 1/2	3,500	10	*502.050.24*
22 | *7/8*	150 | *6*	100 | *4*	W 1/2	3,500	10	*502.052.24*
25 | *1*	150 | *6*	100 | *4*	W 1/2	3,500	10	*502.055.24*
28 | *1 7/64*	150 | *6*	100 | *4*	W 1/2	3,500	10	*502.058.24*

Tube/Sleeve brushes

Tube Brushes with external Thread W 1/2

				1	2	3	4	5	
				Single Spirale IBG				Double Spirale IBGD	
D	L	A	Pack.	RPM	STA straight	ROF straight	MES crimped	PA straight	RPM	STA straight
mm	mm	mm	mm	max.	Art.-No.	Art.-No.	Art.-No.	Art.-No.	max.	Art.-No.
20	150	100	10	2,500	**502.120.24**	**502.420.24**	**502.720.24**	**502.820.24**	2,000	**522.120.24**
22	150	100	10	2,500	**502.122.24**	**502.422.24**	**502.722.24**	**502.822.24**	2,000	**522.122.24**
25	150	100	10	2,500	**502.125.24**	**502.425.24**	**502.725.24**	**502.825.24**	2,000	**522.125.24**
28	150	100	10	2,500	**502.128.24**	**502.428.24**	**502.728.24**		2,000	**522.128.24**
30	160	100	10	1,000	**506.130**	**506.430**	**506.730**	**506.830**	1,500	**526.130**
32	160	100	10	1,000	**506.132**	**506.432**	**506.732**	**506.832**	1,500	**526.132**
35	160	100	10	1,000	**506.135**	**506.435**	**506.735**	**506.835**	1,500	**526.135**
38	160	100	10	1,000	**506.138**	**506.438**	**506.738**	**506.838**	1,500	**526.138**
40	160	100	10	1,000	**506.140**	**506.440**	**506.740**	**506.840**	1,500	**526.140**
44	160	100	5	1,000	**506.144**	**506.444**	**506.744**	**506.844**	1,500	**526.144**
50	160	100	5	1,000	**506.150**	**506.450**	**506.750**	**506.850**	1,500	**526.150**
57	160	100	5	1,000	**506.157**	**506.457**	**506.757**	**506.857**	1,500	**526.157**
63	160	100	5	1,000	**506.163**	**506.463**	**506.763**	**506.863**	1,500	**526.163**
69	160	100	5	1,000	**506.169**	*506.469*	**506.769**	**506.869**	1,500	**526.169**
75	160	100	5	1,000	**506.175**	**506.475**	**506.775**	**506.875**	1,500	**526.175**
82	160	100	5	1,000	**506.182**	**506.482**	**506.782**	*506.882*	1,500	**526.182**
88	160	100	5	1,000	**506.188**	*506.488*	*506.788*	*506.888*	1,500	**526.188**
94	160	100	5	1,000	**506.194**	*506.494*	*506.794*	*506.894*	1,500	**526.194**
101	160	100	5	1,000	**506.101**	**506.401**	**506.701**	**506.801**	1,500	**526.101**
125	160	100	5	1,000	**506.106**	*506.406*	**506.706**	*506.806*	1,500	**526.106**
150	160	100	5	1,000	**506.211**	*506.411*	*506.711*	*506.811*	1,000	*526.111*
200	160	100	5	1,000	**506.220**	available on demand	*506.720*	*506.820*	1,000	available on demand

Mechanical Application
Only use the brush with the indicated maximal peripheral speed (RPM max.). The max. RPM only is allowed when the brush is clamped min. for 10 mm into the tool. When the brush is inserted into the suitable work piece, higher RPMs are possible. Only use the brush right rotating.

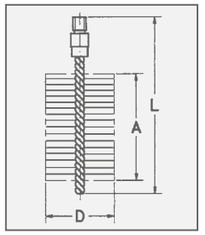

Item Nos. in bold are available ex stock.
Consider our minimum order value for *italic printed* article numbers (see page 148).

STA = steel wire
ROF = stainless steel wire
MES = brass wire
PA = polyamide

Tube Brushes with internal Thread / Boiler Brushes IBG

	D	L	A	Thread	RPM	Pack.	STA straight	PA straight
	mm | *inch*	mm | *inch*	mm | *inch*		max.		Art.-No.	Art.-No.
	Single Spirale							
1	30 | *1 3/16*	160 | *6 1/4*	100 | *4*	M 10i	1,000	10	*506.130.60*	
1	40 | *1 5/8*	160 | *6 1/4*	100 | *4*	M 10i	1,000	10	*506.140.60*	
1	50 | *2*	160 | *6 1/4*	100 | *4*	M 10i	1,000	10	*506.150.60*	
1	60 | *2 3/8*	160 | *6 1/4*	100 | *4*	M 10i	1,000	10	*506.160.60*	
1	80 | *3*	160 | *6 1/4*	100 | *4*	M 10i	1,000	10	*506.180.60*	
1	90 | *3 1/2*	160 | *6 1/4*	100 | *4*	M 10i	1,000	10	**507.190**	
1	101 | *4*	160 | *6 1/4*	100 | *4*	M 10i	1,000	10	*506.101.60*	
1	120 | *4 3/4*	160 | *6 1/4*	100 | *4*	M 10i	1,000	10	**507.105**	*506.805.60*
2	20 x 30 | *51/64 x 1 3/16*	140 | *5 1/2*	80 | *3*	M 10i		10	**533.405**	
2	15 x 30 | *19/32 x 1 3/16*	160 | *6 1/4*	100 | *4*	M 10i		10	*533.408*	
2	30 x 50 | *1 3/16 x 2*	160 | *6 1/4*	100 | *4*	M 10i		10	*532.218.60*	
2	40 x 90 | *1 5/8 x 3 1/2*	160 | *6 1/4*	100 | *4*	M 10i		10	*532.214.60*	
2	50 x 100 | *2 x 4*	160 | *6 1/4*	100 | *4*	M 10i		10	*532.303.60*	

Suitable back board brushes you find at page 113.

Sleeves Brushes Conical, without Thread

	D	L	A	RPM	Pack.	Single Spirale IBE STA crimped	Double Spirale IBD STA straight
	mm | *inch*	mm | *inch*	mm | *inch*	max.		Art.-No.	Art.-No.
3	10-20 | *25/64 - 51/64*	170 | *6 3/4*	100 | *4*	1,000	10	**541.372**	**549.101**
3	15-25 | *19/32 - 1*	170 | *6 3/4*	100 | *4*	1,000	10	**540.321**	**549.102**
3	20-30 | *51/64 - x 1 3/16*	170 | *6 3/4*	100 | *4*	1,000	10	**541.373**	**549.103**
3	25-35 | *1 - 1 3/8*	170 | *6 3/4*	100 | *4*	1,000	10	**540.323**	**549.104**
3	32-42 | *1 17/64 -1 5/8*	170 | *6 3/4*	100 | *4*	1,000	5	**540.324**	**549.105**
3	40-50 | *1 5/8 - 2*	170 | *6 3/4*	100 | *4*	1,000	5	**540.325**	**549.106**
3	38-70 | *1 1/2 - 2 3/4*	170 | *6 3/4*	100 | *4*	1,000	5	*540.225*	**549.107**
3	60-95 | *2 3/8 - 3 3/4*	170 | *6 3/4*	100 | *4*	1,000	5	**540.327**	**549.108**

On request also tube and sleeve brushes with crimped wire are available.

Boiler Brushes / Stove Pipe Brushes

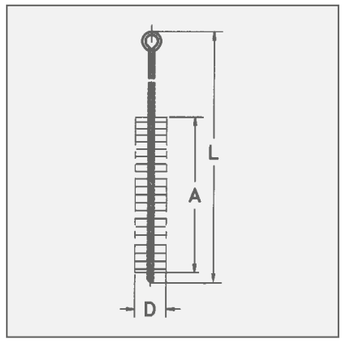

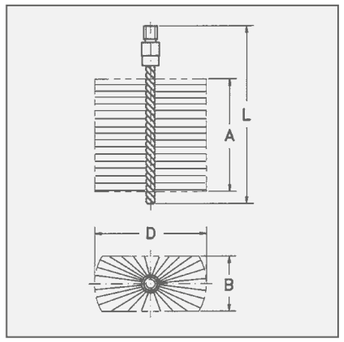

Boiler Brushes
The systematic care of boilers and regular cleaning by brushing increases the boiler efficiency and reduces toxic emissions.

LESSMANN boiler brushes are of outstanding quality made using the best materials and precise manufacturing procedures. Our current programme includes brushes in standard dimensions and special executions. As OEM supplier to important boiler manufacturers we are able to produce large quantities in an efficient way. What is even more important is our know how in meeting the critical tolerances demanded by our customers.

Stove Pipe Brushes
The stove pipe brushes are available in two different executions: with twisted handle (brush and handle one part) or with thread nipple, for screwing and lengthing by using a separate handle.

Handles and Extension Pieces
For tube brushes, boiler brushes and stove pipe brushes, see pages 107 - 109, 111 - 114. The twisted handles have an internal thread and a grip loop, the extension pieces have both an internal thread and an external thread.

Suitable Thread Adapters
see page 115

Item Nos. in bold are available ex stock.
Consider our minimum order value for *italic printed* article numbers (see page 139).

STA = steel wire
PA = polyamide

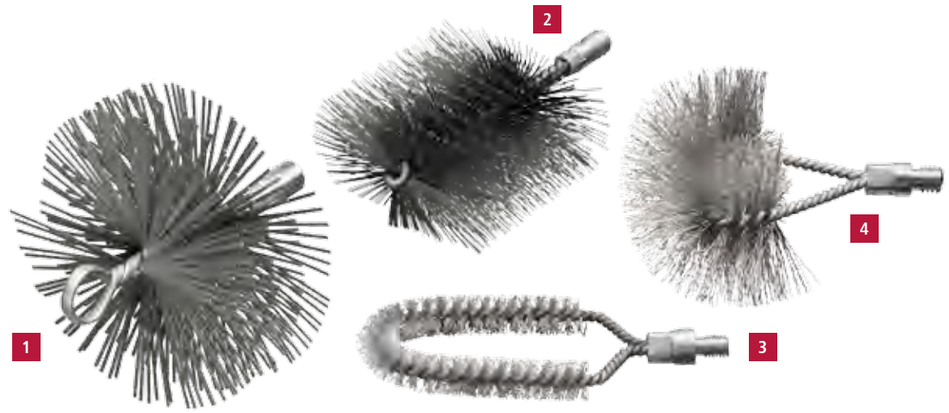

EAN **1 Chimney Brushes with Eye and internal Thread IBZG, Flat Wire 2.0 x 0.40**

Filling	D	L	A	Internal Thread	Pack	Art.-No.	Filling	D	L	A	Internal Thread	Pack	Art.-No.
STA flat	125	160	55	M 12 i	1	**507.007**	**STA** flat	250	160	55	M 12 i	1	**507.004**
STA flat	150	160	55	M 12 i	1	**507.001**	**STA** flat	300	160	55	M 12 i	1	**507.005**
STA flat	175	160	55	M 12 i	1	**507.002**	**STA** flat	350	160	55	M 12 i	1	**507.006**
STA flat	200	160	55	M 12 i	1	**507.003**							

Boiler Brushes with external Thread IBG, Steel Wire, rectangular/curved

	Filling	B mm | *inch*	D mm | *inch*	Format	L mm | *inch*	A mm | *inch*	Thread	Pack.	Art.-No.
2	**PA** straight	30 | *1 3/16*	50 | *2*	rectangular	160 | *6 3/8*	100 | *4*	W 1/2	5	**533.008.24**
	PA straight	50 | *2*	100 | *4*	rectangular	160 | *6 3/8*	100 | *4*	W 1/2	5	*533.010.24*
	STA straight	30 | *1 3/16*	50 | *2*	rectangular	160 | *6 3/8*	100 | *4*	W 1/2	5	**532.218**
	STA straight	30 | *1 3/16*	80 | *3*	rectangular	160 | *6 3/8*	100 | *4*	W 1/2	5	**532.211**
	STA straight	40 | *1 5/8*	80 | *3*	rectangular	160 | *6 3/8*	100 | *4*	W 1/2	5	**532.202**
	STA straight	50 | *2*	100 | *4*	rectangular	160 | *6 3/8*	100 | *4*	W 1/2	5	**532.203**
	STA straight	50 | *2*	120 | *4 3/4*	rectangular	160 | *6 3/8*	100 | *4*	W 1/2	5	**532.205**
3	**STA** crimped	18 | *45/64*	70 | *2 3/4*	curved	160 | *6 3/8*	100 | *4*	W 1/2	5	**529.301.24**
	STA crimped	30 | *1 3/16*	80 | *3*	curved	175 | *6 7/8*	120 | *4 3/4*	W 1/2	5	**529.302**
4	**STA** crimped	80 | *3*	150 | *6*	curved	150 | *6*	120 | *4 3/4*	W 1/2	5	**529.311**
	PA straight	80 | *3*	150 | *6*	curved	150 | *6*	120 | *4 3/4*	W 1/2	5	*529.811*
	STA crimped	80 | *3*	150 | *6*	curved	150 | *6*	120 | *4 3/4*	M 10i	5	*529.301.60*

Boiler Brushes

1 2 3

Boiler Brushes with Handle IBE

	Filling	B mm | *inch*	D mm | *inch*	Format	L mm | *inch*	A mm | *inch*	Pack.	Art.-No.
1	**PA** straight		20 | *51/64*	round	600 | *23 5/8*	100 | *4*	10	**544.804**
2	**STA** crimped		50 | *2*	round	700 | *27 1/2*	100 | *4*	10	**544.301**
	STA crimped		90 | *3 1/2*	round	600 | *23 5/8*	100 | *4*	10	**544.302**
	STA crimped		10 | *25/64*	round	850 | *33 1/2*	100 | *4*	10	**545.320**
	STA crimped		15 | *19/32*	round	850 | *33 1/2*	100 | *4*	10	*545.321*
	STA crimped		20 | *51/64*	round	850 | *33 1/2*	100 | *4*	10	**545.322**
	STA crimped		25 | *1*	round	850 | *33 1/2*	100 | *4*	10	**545.307**
	STA crimped		35 | *1 3/8*	round	850 | *33 1/2*	100 | *4*	10	**545.311**
	STA crimped		50 | *2*	round	850 | *33 1/2*	100 | *4*	10	**545.312**
	STA crimped		60 | *2 3/8*	round	850 | *33 1/2*	100 | *4*	10	*545.338*
3	**PA** straight	12 | *15/32*	14 | *9/16*	rectangular	600 | *23 5/8*	150 | *6*	10	**554.903**
	STA straight	17 | *43/64*	50 | *2*	rectangular	960 | *38*	60 | *2 3/8*	10	**564.101****
	STA crimped	30 | *1 3/16*	50 | *2*	rectangular	800 | *31 1/2*	100 | *4*	10	**551.801**
	STA crimped	40 | *1 5/8*	50 | *2*	rectangular	1,000 | *39 3/8*	80 | *3*	10	**553.711**
	STA straight	40 | *1 5/8*	80 | *3*	rectangular	1,000 | *39 3/8*	100 | *4*	10	**552.404**
	STA crimped	40 | *1 5/8*	90 | *3 1/2*	rectangular	1,000 | *39 3/8*	80 | *3*	10	**564.301***
	STA straight	50 | *2*	100 | *4*	rectangular	1,000 | *39 3/8*	100 | *4*	10	**552.403**

* Rod made from spring steel 5 Ø | ** with scooped scratcher in the handle

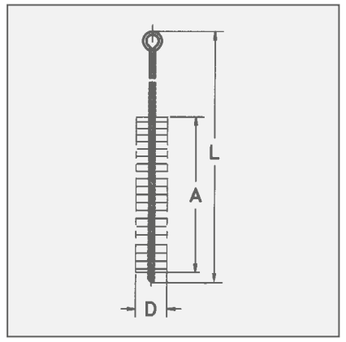

Item Nos. in bold are available ex stock.
Consider our minimum order value for *italic printed* article numbers (see page 148).

STA = steel wire
PA = polyamide

Boiler Brushes-Sets

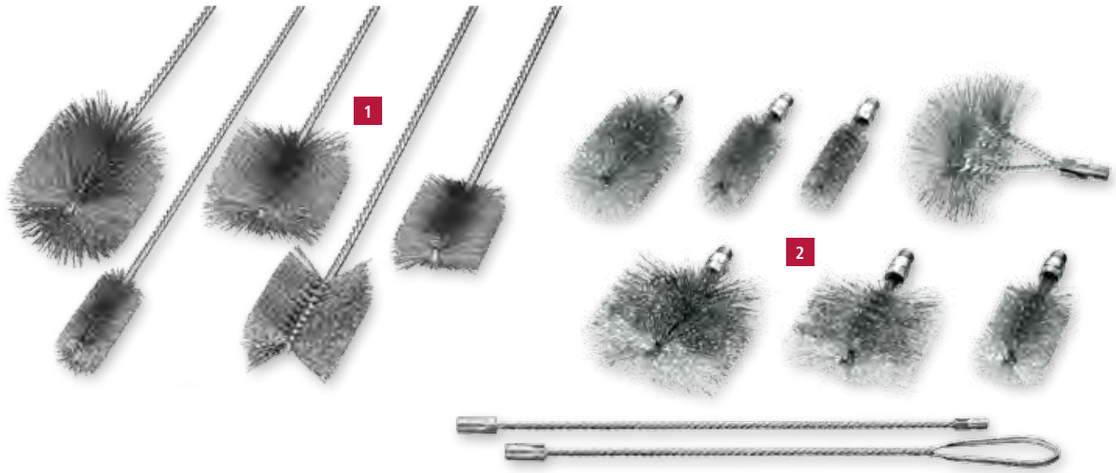

1 2

EAN **1 Brush Set, 5 pieces**

Content: 1 piece each	A	Format	Set with handle, big edition, steel wire: Art.-No.	D	L	Art.-No. Set	Set with handle, small edition, steel wire: Art.-No.	D	L	Art.-No. Set
Cylinder Brush	100	round	545.303	38	1.000	**599.921**	544.307	15	600	**599.931**
Cylinder Brush	100	round	545.331	100	1.000		544.361	25	800	
Boiler Brush	100	rectangular	552.811	30 x 70	1.000		559.831	31 x 20	600	
Boiler Brush	100	rectangular	552.816	50 x 100	1.000		551.811	30 x 20	500	
Boiler Brush	100	rectangular	559.713	75 x 30	1.000		551.812	50 x 40	700	

EAN **2 Brush Set, Steel Wire, external Thread W 1/2, crimped, 9 pieces**

Content: 1 piece each		D mm | *inch*	L mm | *inch*	A mm | *inch*	Format	Art.-No. Set
506.330	Interior Brushes	30 | *1 3/16*	160 | *6 1/4*	100 | *4*	round	**599.962**
506.340	Interior Brushes	40 | *1 5/8*	160 | *6 1/4*	100 | *4*	round	
506.363	Interior Brushes	63 | *2 1/2*	160 | *6 1/4*	100 | *4*	round	
532.718	Boiler Brush	30 x 50 | *1 3/16 x 2*	160 | *6 1/4*	100 | *4*	rectangular	
532.716	Boiler Brush	30 x 90 | *1 3/16 x 3 1/2*	160 | *6 1/4*	100 | *4*	rectangular	
532.703	Boiler Brush	50 x 100 | *2 x 4*	160 | *6 1/4*	100 | *4*	rectangular	
529.311	Back board brush	80 x 150 | *3 x 6*	150 | *6*			
567.671	Handle with Eye		500 | *20*			
567.771	Extension		500 | *20*			

EAN **Brush Set, Polyamide Bristles, external Thread W 1/2, crimped, 9 pieces**

Content: 1 piece each		D mm | *inch*	L mm | *inch*	A mm | *inch*	Format	Art.-No. Set
506.838	Interior Brushes	38 | *1 1/2*	160 | *6 1/4*	100 | *4*	round	**599.991**
506.855	Interior Brushes	55 | *2 1/4*	160 | *6 1/4*	100 | *4*	round	
506.860	Interior Brushes	60 | *2 3/8*	160 | *6 1/4*	100 | *4*	round	
533.008.24	Boiler Brush	30 x 50 | *1 3/16 x 2*	160 | *6 1/4*	100 | *4*	rectangular	
533.009.24	Boiler Brush	30 x 90 | *1 3/16 x 3 1/2*	160 | *6 1/4*	100 | *4*	rectangular	
533.010.24	Boiler Brush	50 x 100 | *2 x 4*	160 | *6 1/4*	100 | *4*	rectangular	
529.811	Back board brush	80 x 150 | *3 x 6*	150 | *6*			
567.671	Handle with Eye		500 | *20*			
567.771	Extension		500 | *20*			

Stove Pipe Brushes

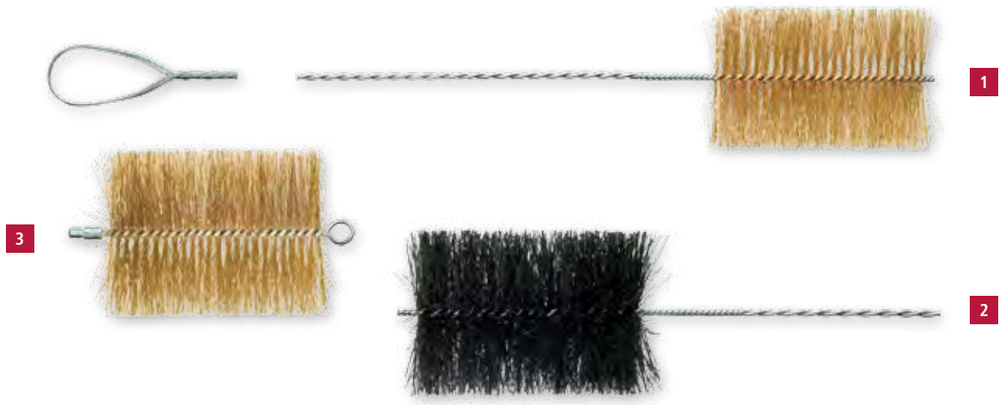

Stove Pipe Brushes with Twisted Handle IBZ

	Filling	D mm | *inch*	L mm | *inch*	A mm | *inch*	Pack.	Art.-No.
1	**STM**	130 | *5 1/8*	2,000 | *78 3/4*	200 | *8*	10	**546.302**
1	**STM**	130 | *5 1/8*	3,000 | *118*	200 | *8*	10	**546.304**
1	**STM**	150 | *6*	2,000 | *78 3/4*	200 | *8*	10	**546.306**
1	**STM**	180 | *7*	2,000 | *78 3/4*	200 | *8*	10	**546.314**
1	**STM**	200 | *8*	2,000 | *78 3/4*	200 | *8*	10	**546.318**
2	**BAS**	150 | *6*	2,000 | *78 3/4*	200 | *8*	10	**546.906**
2	**BAS**	150 | *6*	3,000 | *118*	200 | *8*	10	**546.908**

Delivery only in noted packaging unit. If you need smaller quantities, please order stove pipe brushes with separate handle.

3 Stove Pipe Brushes with separate Handle IBZG

Filling	D mm | *inch*	L mm | *inch*	A mm | *inch*	Thread	Pack.	Art.-No.
STM	80 | *3*	275 | *10 7/8*	200 | *8*	M 10	5	**507.307**
STM	100 | *4*	275 | *10 7/8*	200 | *8*	M 10	5	**507.308**
STM	130 | *5 1/8*	275 | *10 7/8*	200 | *8*	M 10	5	**507.301**
STM	150 | *6*	275 | *10 7/8*	200 | *8*	M 10	5	**507.302**
STM	160 | *6 3/8*	275 | *10 7/8*	200 | *8*	M 10	5	**507.303**
STM	180 | *7*	275 | *10 7/8*	200 | *8*	M 10	5	**507.304**
STM	200 | *8*	275 | *10 7/8*	200 | *8*	M 10	5	**507.305**
BAS	150 | *6*	275 | *10 7/8*	200 | *8*	M 10	5	**507.959**

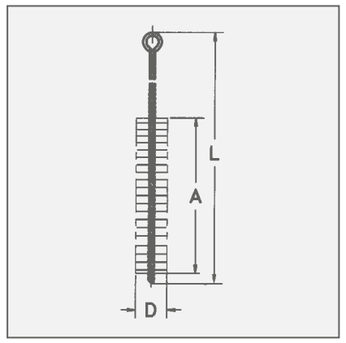

Item Nos. in bold are available ex stock.
Consider our minimum order value for *italic printed* article numbers (see page 148).

STM = brass coated steel
BAS = bassine black

Accessories

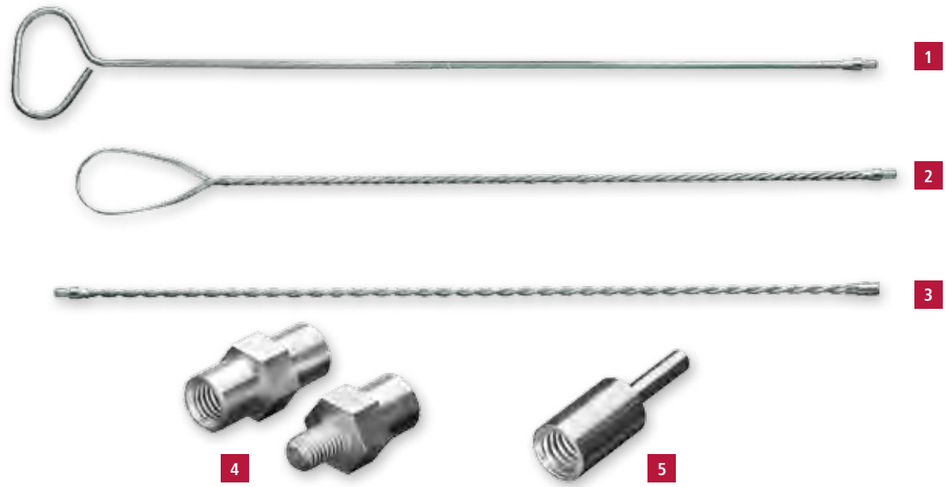

Handle with Eye

	L mm | *inch*	Thread	Format	Pack.	Art.-No.
1	400 | *16*	External M 10	round steel, straight	1	**568.805**
1	800 | *31 1/2*	External M 10	round steel, straight	1	*568.802*
1	1,000 | *40*	External M 10	round steel, straight	1	**568.806**
EAN 2	1,000 | *40*	Internal M 4	twisted wire	1	*566.603*
EAN 2	1,000 | *40*	Internal M 6	twisted wire	1	**566.601**
EAN 2	1,000 | *40*	Internal M 10	twisted wire	1	**566.602**
EAN 2	1,000 | *40*	External M 12	twisted wire	1	**567.201**
EAN 2	1,000 | *40*	Internal W 3/8	twisted wire	1	*567.603*
2	500 | *20*	Internal W 1/2	twisted wire	1	**567.671**
EAN 2	1,000 | *40*	Internal W 1/2	twisted wire	1	**567.601**

3 Extension

	L mm | *inch*	Thread	Format	Pack.	Art.-No.
EAN	1,000 | *40*	Internal / External M 4	twisted wire	1	**566.703**
EAN	1,000 | *40*	Internal / External M 6	twisted wire	1	**566.701**
EAN	1,000 | *40*	Internal / External M 10	twisted wire	1	**566.702**
EAN	1,000 | *40*	Internal / External M 12	twisted wire	1	**567.731**
EAN	1,000 | *40*	Internal / External W 3/8	twisted wire	1	*567.703*
	500 | *20*	Internal / External W 1/2	twisted wire	1	**567.771**
EAN	1,000 | *40*	Internal / External W 1/2	twisted wire	1	**567.701**

EAN Adapter Threads

			L mm | *inch*	Pack.	Art.-No.
4	Internal W 1/2	Internal M 12	40 | *1 3/8*	1	**001.211**
4	Internal W 1/2	Internal M 10	40 | *1 3/8*	1	**001.212**
4	Internal W 3/8	Internal M 10	40 | *1 3/8*	1	*001.215*
4	External M 10	Internal W 1/2	40 | *1 3/8*	1	**001.222**
4	External M 10	Internal W 3/8	40 | *1 3/8*	1	**001.225**
5	Internal W 1/2	Shank Ø 6 mm	50 | *2*	1	**000.071**
5	Internal M 6	Shank Ø 6 mm	50 | *2*	1	**000.072**

Fitting Brushes

EAN

Interior Fitting Brushes IBM

D mm | *inch*	L	A	Filling Material	Pack.	Art.-No.
8 | *5/16*	185	12	**ROF** 0.10 | *0.004"*	10	**562.508**
10 | *25/64*	185	12	**ROF** 0.10 | *0.004"*	10	**562.510**
12 | *15/32*	185	15	**ROF** 0.10 | *0.004"*	10	**562.512**
15 | *19/32*	185	20	**ROF** 0.15 | *0.006"*	10	**562.515**
18 | *45/64*	185	20	**ROF** 0.15 | *0.006"*	10	**562.518**
22 | *7/8*	185	25	**ROF** 0.20 | *0.008"*	10	**562.522**
28 | *1 7/64*	185	25	**ROF** 0.20 | *0.008"*	10	**562.528**
35 | *1 3/8*	185	25	**ROF** 0.20 | *0.008"*	10	**562.535**

Fitting Brushes
With designed two-components handle
For the inner cleaning in tubes in gas, water and climatic conditions. We use only stainless steel wire as the filling material for these brushes. This prevents long-term damage by material deposit in tubes.

Fitting Brush Set
A case of artificial leather that contains the most frequently needed interior and exterior brushes.

Recommendation for users: When using interior fitting brushes, please only use brushes with stainless steel wire. This will avoid pitting by the use of rusting wire parts.

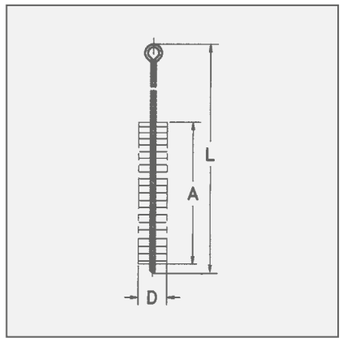

Item Nos. in bold are available ex stock.
Consider our minimum order value for *italic printed* article numbers (see page 148).

STA = steel wire
ROF = stainless steel wire
PP = polyprophylene

Brushes and Scratcher

1 Battery Terminal Brushes

Filling Material	D mm | *inch*	L mm | *inch*	A mm | *inch*	Pack.	Art.-No.
STA	17+24 | *43/64+15/16*	120/180 | *4 3/4 / 7*	60 | *2 3/8*	12	**563.301***

2 Soluble Oil Brushes

Filling Material	Ø Bundle mm | *inch*	L mm | *inch*	H mm | *inch*	Pack.	Art.-No.
mixed hair	7 | *9/32*	150 | *6*	40 | *1 5/8*	100	**570.907**
mixed hair	10 | *25/64*	240 | *9 1/2*	55 | *2 1/4*	100	**570.910**

3 Soldering Fluid Brushes

Filling Material	D mm | *inch*	L mm | *inch*	H mm | *inch*	Pack.	Art.-No.
bristles	10 | *25/64*	123 | *4 7/8*	20 | *51/64*	100	**045.910**
bristles	15 | *19/32*	140 | *5 1/2*	25 | *1*	100	**045.915**
STA	20 | *51/64*	205 | *8 5/64*	30 | *1 1/4*	200	**045.301**

4 Rust Scratcher

Filling Material	D mm | *inch*	L mm | *inch*	H mm | *inch*	Pack.	Art.-No.
STA straight 0.23	5/8 | *13/64 / 5/16*	100 | *4*	6 | *15/64*	180	**184.101**
STA Straight 0.23 | *0.009"* + **PP** 0.15 | *0.006"*	5/8 | *13/64 / 5/16*	100 | *4*	6+15 | *15/64 + 19/32*	180	*184.104*

* conical filling

Battery Terminal Brushes
For cleaning of battery terminals. The twisted brush is conical filled for cleaning connection terminals of the battery cable. To clean the battery terminals use the ringshaped filed cards stuck in the handle.

Soluble Oil Brushes
With twisted wire handle for workshop use.

Soldering Fluid Brushes
The handle is made of tinned metal.

LESSMANN®
THE GERMAN BRUSH COMPANY

D.I.Y. BRUSHES AND SALES PROMOTION

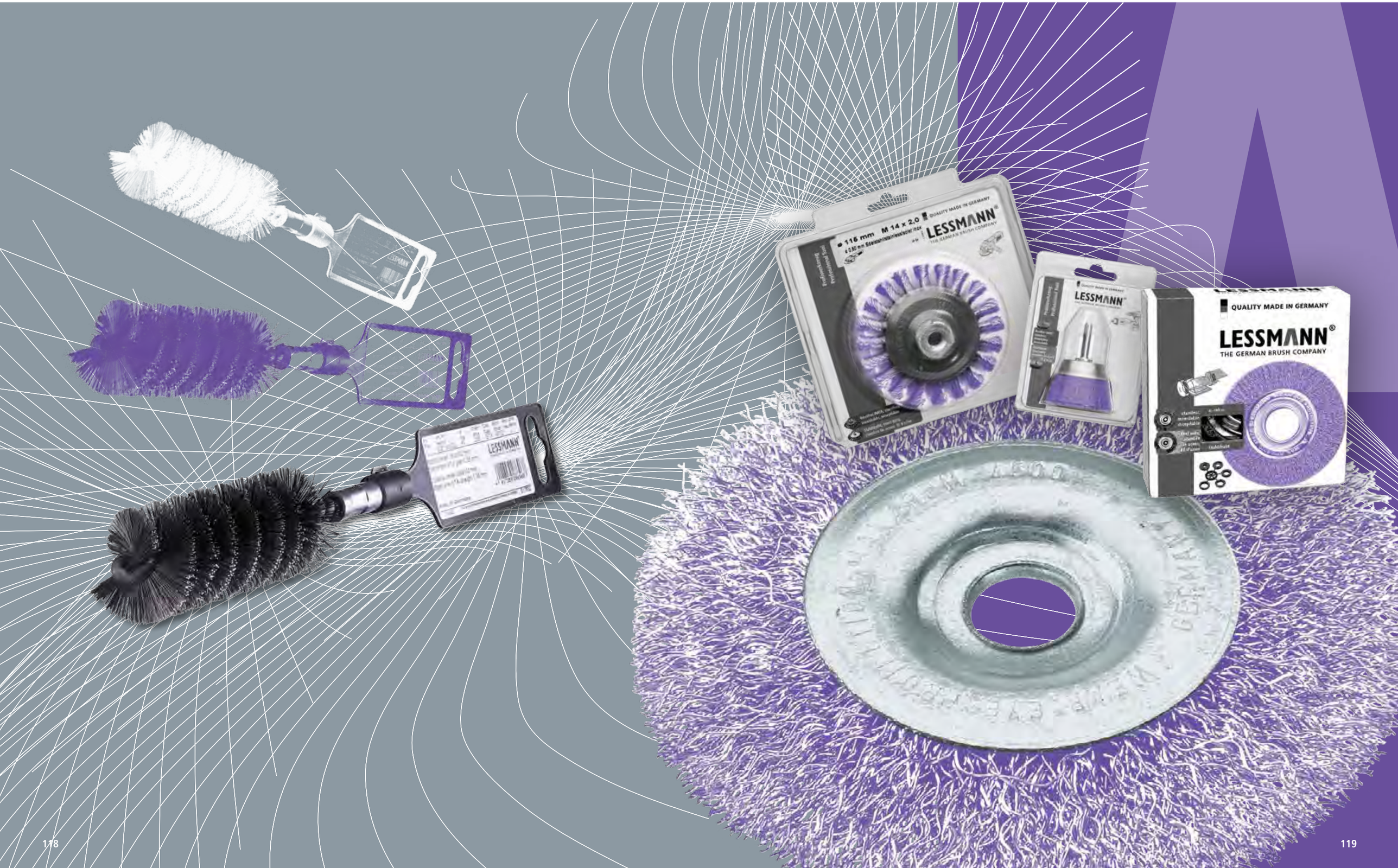

Do It Yourself Brushes

D.I.Y Brushes with Shank
Do It Yourself brushes are an excellent alternative to the professional tools previously shown in this catalogue. Available are cup brushes from diameter 50 - 75 mm, wheel brushes diameter 50 - 100 mm, end brushes and cylinder brushes.

Stainless Steel Brushes
Information on working on stainless steel you find at www.lessmann.com

Attractive assortment
Coarse and fine steel wire, brass wire and abrasive filaments are available as filling materials.

The brushes are packed in small display cartons, 10 pieces per carton.

We offer different packaging to present these and other common brushes with shanks in specialist shops.

Item Nos. in bold are available ex stock.
Consider our minimum order value for *italic printed* article numbers (see page 148).

STA	= steel wire, crimped
ROF	= stainless steel wire
MES	= brass wire, crimped
SIC	= brass wire

1 Wheel Brushes with Shank 6 mm Ø

D mm | *inch*	A mm | *inch*	RPM max.	Pack.	**STA 0.20** | *0.008"* **0.25** | *0.010"*	**STA 0.30** | *0.012"* **0.35** | *0.014"*	**ROF 0.20** | *0.008"* Art.-No.	**ROF 0.30** | *0.012"* Art.-No.
50 | *2*	8-10 | *3/8*	4,500	10	**410.122**	**410.123**		
75 | *3*	8-10 | *3/8*	4,500	10	**410.132**	**410.133**	**410.134**	**410.135**
75 | *3*	14-16 | *5/8*	4,500	10		**410.173**		
100 | *4*	8-10 | *3/8*	4,500	10	**410.152**	**410.153**	**410.154**	**410.155**
100 | *4*	14-16 | *5/8*	4,500	10		**410.183**		**410.185**

						2	
D mm | *inch*	A mm | *inch*	RPM max.	Pack.	**MES 0.20** | *0.008"* Art.-No.	**MES 0.25** | *0.010"* Art.-No.	**SIC 80/1.2** Art.-No.	**SIC 180/0.9** Art.-No.
75 | *3*	8-10 | *3/8*	4,500	10		**410.136**	**410.138**	*410.139*
100 | *4*	8-10 | *3/8*	4,500	10	**410.156**		**410.158**	*410.159*

3 Cup Brushes with Shank 6 mm Ø

D mm | *inch*	RPM max.	Pack.	**STA 0.20** | *0.008"* Art.-No.	**STA 0.30** | *0.012"* Art.-No.	**ROF 0.20** | *0.008"* Art.-No.	**ROF 0.30** | *0.012"* Art.-No.
50 | *2*	4,500	10	**430.122**	**430.123**	**430.124**	**430.125**
75 | *3*	4,500	10	**430.132**	**430.133**	**430.134**	**430.135**

				4	
D mm | *inch*	RPM max.	Pack.	**MES 0.30** | *0.012"* Art.-No.	**SIC 80/1.2** Art.-No.	**SIC 320/0.6** Art.-No.
50 | *2*	4,500	10	**430.126**	**430.128**	**430.129**
75 | *3*	4,500	10	**430.136**	**430.138**	**430.139**

5 End Brushes with Shank 6 mm Ø

D mm | *inch*	RPM max.	Pack.	**STA 0.30** | *0.012"* Art.-No.	**SIC 80/1.2** Art.-No.
25 | *1*	12,000	10	**455.161**	**453.821**

6 Cylinder Brushes with Shank 6 mm Ø

D mm | *inch*	RPM max.	Pack.	**STA 0.30** | *0.012"* Art.-No.
28 | *1*	1,500	10	**541.301**

7 D.I.Y. Wheel Brushes with bore

D mm | *inch*	A mm | *inch*	d	RPM max.	Pack.	**STA 0.35** | *0.014"* Art.-No.
75 | *3*	10 | *3/8*	1/2"	4,500	10	**300.102**
100 | *4*	10 | *3/8*	1/2"	4,500	10	**320.102**

Packing and Sales Promotion

Brushes with blister packing
All standard brushes for drilling machines and angle grinders are available with blister packing. The blister packing is available with attractive labels with information about technical data and EAN-bar code. The clam shells emphasize the brushes' value, protect them and provide good visible presentation.

On request we can arrange your individual private label solution.

Technical data on front, details and EAN on back: Blister Packing

EAN

Brushes for Angle Grinders in Blister Packaging

	D	Thread	**STH 0.35** | *0.014"*	**STH 0.50** | *0.020"*	**ROH 0.30** | *0.012"*	**ROH 0.50** | *0.020"*	**STA 0.35** | *0.014"*
	mm | *inch*	mm | *inch*	Art.-No.	Art.-No.	Art.-No.	Art.-No.	Art.-No.
Knot Cup Brushes	65 | *2 1/2*	M 14	*482.117.09*	*482.217.09*		*482.817.09*	
	65 | *2 1/2*	M 10		*482.214.09*			
Knot Wheel Brushes	115 | *4 1/2*	Bo. 22.2 | *7/8*		*472.211.09*		*472.811.09*	
	115 | *4 1/2*	M 14		*472.217.09*			
Knot Bevel Brushes	100 | *4*	M 14		*471.257.09*			
	115 | *4 1/2*	M 14		*472.257.09*		*472.857.09*	
Cup Brushes crimped	60 | *2 3/8*	M 14			*421.367.09*		*421.167.09*
	60 | *2 3/8*	M 10					*421.164.09*
	75 | *3*	M 14					*423.167.09*
Conical Brushes crimped	100 | *4*	M 14					*422.177.09*

EAN

Brushes for Grinders and Drilling Machines with Shank 6 mm Ø in Blister Packaging

	D	**STH 0.35** | *0.014"*	**STH 0.50** | *0.020"*	**ROH 0.35** | *0.014"*
	mm | *inch*	Art.-No.	Art.-No.	Art.-No.
Knot End Brushes	19 | *3/4*	*453.278.09*		
	22 | *7/8*			*454.378.09*
Knot Wheel Brushes	75 | *3*		*417.198.09*	

EAN

D.I.Y. Brushes for Grinders and Drilling Machines with Shank 6 mm Ø in Blister Packaging

	D	**STA 0.25** | *0.010"*	**STA 0.30** | *0.012"*	**ROF 0.30** | *0.012"*	**MES 0.25** | *0.010"*	**SIC 80/1.2**
	mm | *inch*	Art.-No.	**0.35** | *0.014"* Art.-No.	Art.-No.	Art.-No.	Art.-No.
Wheel Brushes	50 | *2*		*410.123.09*			
	75 | *3*		*410.133.09*	*410.135.09*	*410.136.09*	*410.138.09*
	100 | *4*	*410.152.09*	*410.153.09*			*410.158.09*
Cup Brushes	50 | *2*	*430.122.09*	*430.123.09*		*430.126.09*	*430.128.09*
	75 | *3*	*430.132.09*	*430.133.09*			*430.138.09*
End Brushes	25 | *1*		*455.161.09*			
Cylinder Brushes	28 | *1*		*541.301.09*			

Presentation „Cut Case" Carton

Cut Cases for presenting the products
Cut Cases are a simple alternative for presenting brushes in large quantities. The Products can be inserted in the self-service wall modularly.

Item Nos. in bold are available ex stock.
Consider our minimum order value for *italic printed* article numbers (see page 148).

STA	= steel wire, crimped
STH	= steel wire, high tensile, straight
ROF	= stainless steel wire
ROH	= stainless steel wire, high tensile, straight
MES	= brass wire
PA	= polyamide
PP	= polypropylene
SIC	= brass wire

EAN

Brushes in Cut Cases

Description	Filling material			Pack.	Carton size	Art.-No.
File Cleaner	**STA** straight 0,30	250 x 40		10	1	**037.201.CC**
Hand Brush	**STA** straight 0,35	2 Rows		10	1	**100.021.CC**
Hand Brush	**STA** straight 0,35	3 Rows		10	1	**100.031.CC**
Hand Brush	**STA** straight 0,35	4 Rows		10	1	**100.041.CC**
Hand Brush	**STA** straight 0,35	5 Rows		8	1	**100.051.CC**
Hand Brush	**STA** straight 0,35	6 Rows		8	1	**100.061.CC**
Hand Brush	**ROF** crimped 0,35	3 Rows		10	1	**104.631.CC**
Hand Brush	**ROF** crimped 0,35	4 Rows		10	1	**104.641.CC**
Hand Brush	**MES** crimped 0,35	3 Rows		10	1	**107.631.CC**
Hand Brush	**MES** crimped 0,35	4 Rows		10	1	**107.641.CC**
Hand Brush	**STA** straight 0,35	4 Rows	with Scraper	8	1	**120.401.CC**
Rivet Brush	**STA** straight 0,35	3 Rows	V-shaped	8	1	**120.801.CC**
Rivet Brush	**ROF** straight 0,35	3 Rows	V-shaped	8	1	**120.811.CC**
Duster	**PP** straight 0,40	4 Rows		6	2	**124.801.CC**
Spark Plug Brush	**MES** crimped 0,15	3 Rows		25	1	**125.211.CC**
Fine Scratch Brush	**MES** crimped 0,15	4 Rows		15	1	**126.411.CC**
Fine Scratch Brush	**PA** straight 0,30	4 Rows		15	1	**126.451.CC**
Staining Brush	**MES** crimped 0,15	7 Rows		6	1	**144.001.CC**
Staining Brush	Leather/Fibre	3/7 Rows		4	1	**144.701.CC**
Professional Hand Brush	**STA** straight 0,35	2 Rows	2 Components Handle	10	1	**182.401.CC**
Professional Hand Brush	**ROF** straight 0,35	2 Rows	2 Components Handle	10	1	**182.421.CC**
Professional Hand Brush	**MES** crimped 0,25	2 Rows	2 Components Handle	10	1	**182.451.CC**
Hand Brush with Plastic Handle	**ROF** crimped 0,35	3 Rows		10	1	**185.431.CC**
Wheel Brush with Plastic Body	**SIC** K 80 / 1,2	7 Rows	Thread M 14	2	1	**402.880.CC**
Disc Brush with Plastic Body	**SIC** K 80 / 1,2	4 Rows	Thread M 14	2	1	**405.845.CC**
Cup Brush	**STA** crimped 0,35	DIA 65	Thread M 14	15	1	*421.167.CC*
Cup Brush	**ROH** crimped 0,30	DIA 65	Thread M 14	15	1	*421.367.CC*
Knot Cup Brush	**STH** straight 0,50	DIA 65	Thread M 14	12	1	*482.217.CC*
Knot Cup Brush	**STH** straight 0,50	DIA 90	Thread M 14	8	1	*485.237.CC*
Knot Conical Brush	**STH** straight 0,50	DIA 100	Thread M 14	5	1	*471.257.CC*
Knot Wheel Brush	**STH** straight 0,50	DIA 115	Bore 22,2	6	1	*472.211.CC*

Measurement in mm: Carton Size 1: 300x100x130 | Carton Size 2: 300x200x130

Sales Promotion Display

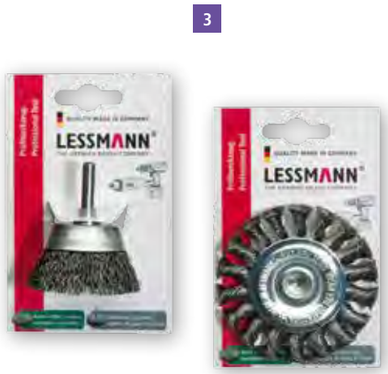

Low-cost product presentation – Brushes on card

EAN **1 Displaybox with Toolbrushes**

Pack	Catalogue Page	Filling	D mm | *inch*	d mm | *inch*	RPM max.	Pack.	Art.-No.
Knot Cup Brushes	53	**STH** 0.50 | *0.020"*	65 | *2 1/2*	M 14 x 2.0	12,500	20	**482.217.07**
Knot Wheel Brushes	17	**STH** 0.50 | *0.020"*	115 | *4 1/2*	22.2 | *7/8*	12,500	18	**472.211.07**
Knot Bevel Brushes	59	**STH** 0.50 | *0.020"*	100 | *4*	M 14 x 2.0	12,500	12	**471.257.07**
Crimped Cup Brushes	56	**STA** 0.30 | *0.012"*	60 | *2 3/8*	M 14 x 2.0	12,500	20	**421.167.07**

2 D.I.Y. Brush Assortments; Shank Brushes Description and technical data please see table above and on page 120, 121

Contents: 36 pieces assorted						Art.-No.
6 Wheel Brushes	410.132	6 Wheel Brushes	410.153	6 Cup Brushes	430.123	**499.907**
6 Cup Brushes	430.133	6 End Brushes	455.161	6 Cylinder Brushes	541.301	
9 Wheel Brushes	410.132	9 Cup Brushes	430.123			**499.921**
9 Wheel Brushes	410.153	9 Cup Brushes	430.133			

EAN **3 Brushes with Shank 6 mm Ø on Card** Description and technical data please see table above and on page 65, 120, 121

	D mm | *inch*	Pack.	**STA 0.30** | *0.012"* **0.35** | *0.014"*	**MES 0.25** | *0.010"* **0.30** | *0.012"*	**SIC 80** Art.-No.	**STH knotted 0.50** | *0.020"*
Wheel Brushes	50 | *2*	10	**410.123.07**			
	75 | *3*	10	**410.133.07**	**410.136.07**	**410.138.07**	**417.198.07**
	100 | *4*	10	**410.153.07**		**410.158.07**	
Cup Brushes	50 | *2*	10	**430.123.07**	**430.126.07**	**430.128.07**	
	75 | *3*	10	**430.133.07**		**430.138.07**	
End Brushes	25 | *1*	10	**455.161.07**			
Cylinder Brushes	28 | *1*	10	**541.301.07**			

The most demanded tool brushes are not only offered single or bulk packed. These fast sellers are presented even better in sale promoting display cartons. They can be put on tool shelves or on the counter.

The standard assortment contains:
- Knot cup brushes diameter 65
- Knot wheel brushes diameter 115
- Knot bevel brushes diameter 100
- Cup brushes with crimped wire diameter 60

A display carton with the best selling Do It Yourself Brushes, bulk packed, completes the offer.

Item Nos. in bold are available ex stock.
Consider our minimum order value for *italic printed* article numbers (see page 148).

STA = steel wire, crimped
STH = steel wire, high tensile, straight
MES = brass wire, crimped
SIC = silicon carbide bristles

Sales Promotion Tube Brushes

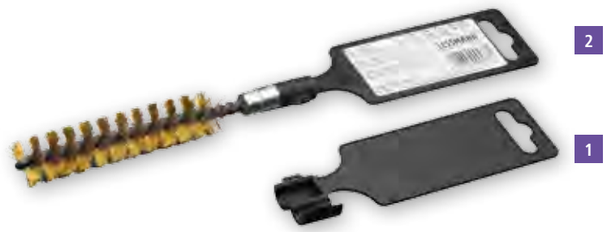

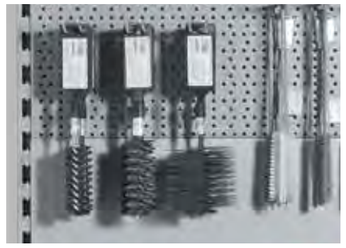

1 Hanger assembly for tube brushes, PP black, with euro hole

Interior Thread	Total length mm | *inch*	Width mm | *inch*	Height mm | *inch*	Pack.	Art.-No.
M 6	135 | *5*	42 | *1 5/8*	2 | *5/64*	10	**000.501**
M 10	135 | *5*	42 | *1 5/8*	2 | *5/64*	10	**000.503**
W 3/8"	135 | *5*	42 | *1 5/8*	2 | *5/64*	10	**000.506**
W 1/2"	135 | *5*	42 | *1 5/8*	2 | *5/64*	10	**000.507**

EAN **2 Brushes with thread, incl. hanger assembly**

	Diameter Brush mm | *inch*	Total length Brush mm | *inch*	Total length Brush mm | *inch*	Thread Brush	Pack.	**STA** Art.-No.
Tube Brushes	20 | *3/4*	150 | *6*	100 | *4*	1/2"	10	*502.120.03*
	30 | *1 1/4*	160 | *6 1/4*	100 | *4*	1/2"	10	**506.130.03**
	35 | *1 1/2*	160 | *6 1/4*	100 | *4*	1/2"	10	*506.135.03*
	40 | *1 3/8*	160 | *6 1/4*	100 | *4*	1/2"	10	**506.140.03**
	50 | *2*	160 | *6 1/4*	100 | *4*	1/2"	10	**506.150.03**
	63 | *2 1/2*	160 | *6 1/4*	100 | *4*	1/2"	10	*506.163.03*
	75 | *3*	160 | *6 1/4*	100 | *4*	1/2"	10	**506.175.03**
	101 | *4*	160 | *6 1/4*	100 | *4*	1/2"	10	**506.101.03**
Boiler Brushes	40 x 80 | *1 3/8 / 3*	160 | *6 1/4*	100 | *4*	1/2"	10	**532.202.03**
	50 x 100 | *2 / 4*	160 | *6 1/4*	100 | *4*	1/2"	10	**532.203.03**

Presentation for tube brushes
With this practical hanger assembly from now on also tube brushes with thread can be presented on self-service walls in the retail market.
The hangers are available in M 6, M 10, W 3/8" and W 1/2". All hangers are with a eurohole.
A label can be fixed at the front of the hanger.

Sales Promotion

Professionalism, service, quality...
The LESSMANN Display units will make a good impression on your customers. They are not only good for your image but will also have a positive effect on promoting and increasing your brush sales. The comprehensive and at the same time clear presentation makes the customers choice much easier.

Take advantage of our experience and use this possibility that will lead to successful increased sales. Beside your special demands the most important thing to know is the branch where your most important customers come from and what their demands are. We have tried and tested variations of assortments for different kind of constellation. Please do not hesitate to contact us and we will arrange your individual programme. Because the production of high quality brushes is as important as having success with our products!

1 | Self-service Wall 100 x 220 cm
The most effective sales promotion for your LESSMANN brush assortment. Available with LESSMANN logo or Brush-Know-how label.

2 | Individual mix for Success
Products that fit in with the wishes of your (most important) customers and their main demand, arranged together with you and your customers. Your assortment can mainly consist of technical brushes or hand brushes.

3 | Carton Packing
All brushes for angle grinders in sales promoting single packing – stable and safe.

4 | Hand Brushes with EAN Code
All standard hand brushes (article no. 10x.xxx) with EAN code. Without extra charges for you!

5 | Display boxes for Shank Brushes
Available as a standard for all shank wheel brushes, cup brushes and end brushes with shank.

6 | Brush-Know-how Flyer
The most important brush applications of our brush assortment in length DIN with technical information and hints!

7 | Hanger Assembly for tube brushes
With this hanger with euro hole, brushes with thread can be presented.

8 | Cut Cases
Cut Cases for an easy solution of presenting products in large quantities.

We will help you with the right choice of shelf
On request we can arrange the right shelf solution for presenting your brushes!

Small self-service wall
A suitable alternative solution: A practical self-service wall with the measurements 67 x 180 cm.

Little helps for orientation (labels)
They give hints regarding brushes and their application. Available for following article groups: Hand brushes, brushes for drilling machines and brushes for angle grinders.

Brush-Know-how Poster
All important brush applications at first glance! Available as label 100 x 40 cm and as poster 40 x 60 cm. Ask us or our representatives!

Private Label
A good idea with different solution possibilities. Ask for your own brand!

Sales promoting blister packing
For all drilling machines and angle grinders.

Take a look at quality
All technical data and safety information as well as observation windows for recognising the brushes (e.g. green marking for stainless steel brushes).

Stainless Steel Marking
LESSMANN brushes with stainless steel wire can easily be recognised by green cups or side plates.

Brush-Know-how flyer
The most important brush application of our brush assortment in length DIN with technical information and hints!

Order now:
German version: Art.-No. **99BKHDEU**
English version: Art.-No. **99BKHENG**

Cut Cases
Cut Cases for an easy solution of presenting products in large quantities.

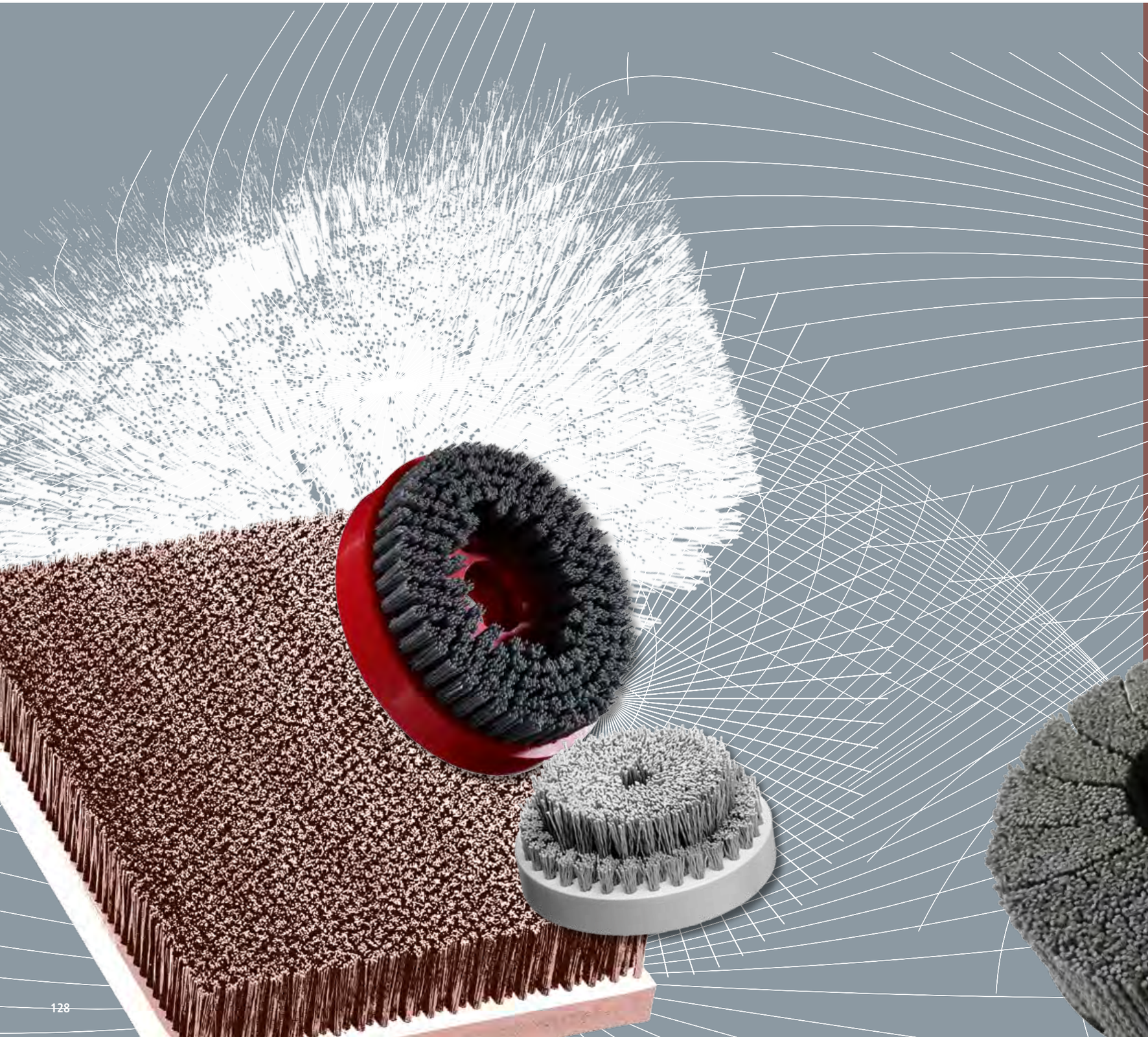

Brushes with carbon fibre

Brushes with carbon fibre for electro-chemical cleaning

To use in machines for cleaning weld seams

Due to oxidation on stainless steel surfaces temper colour is a result from heating. Hence often a post-treatment of the surface is necessary to reestablish the original character.
End brushes with carbon fibres are used in special machines for cleaning weld seams. The typical electrochemical jobs are the following:

Cleaning
To remove tepering colour and scales on stainless steel surfaces, e.g. on weld seams.

Polishing
For polishing stainless steel surfaces. Residues can be removed with end brushes.

Marking
With special patterns surfaces can be marked permanently by the electrochemical process.

Electroplating / Surfacing
Due to the use of the end brushes, different coatings can be put on the surfaces or they can be refined.

Cleaning of areas which are hard to reach

Before the treatment | After the treatment
Cleaning of weld seams

End brushes for standard machines
For many customary available machines for weld seam treatment LESSMANN offers the suitable end brushes.
Depending on the customers' demands the end brushes are available with different adapters, e.g. interior / exterior threads.

Time-saving and effective
Unlike other processes, working with special machines for weld seam cleaning are environmentally friendly and by using it correctly no toxic vapours are generated.
Due to the high flexibility of the filament also areas which are hard to reach can be treated easily.
By using LESSMANN brushes within a short time a clean result is achieved. Weld seams are treated without any residues and surfaces are treated without being damaged.

Brushes with carbon fibre

	Sleeve	DRM	GL	BL	Shape of thread	Thread	Presentation	Pack.	Art.-No.
1	Copper	10	65	30	outside	M6		10	**047.700**
2	Copper	12	90	40	inside	M10 x 0,75	Plastic coating	10	**047.705**
	Copper	12	90	40	inside	M10 x 1,0	Plastic coating + side thread M4	10	**047.707**
	Copper	10	80	30	inside	M8 x 1,0	Plastic coating	10	**047.708**
3	Stainless Steel	8	50	30	outside	M6 x 1,0	Teflon sleeve (DRM 12 mm)	10	**047.750**
	Stainless Steel	8	50	30	outside	M6 x 1,0		10	**047.755**
4	Stainless Steel	8	72	42	outside	M6 x 0,75	Plastic coating	10	**047.754**
5	Stainless Steel	12	75	40	inside	M10		10	**047.757**
6	Stainless Steel	12	75	40	inside	M10		10	**047.801**

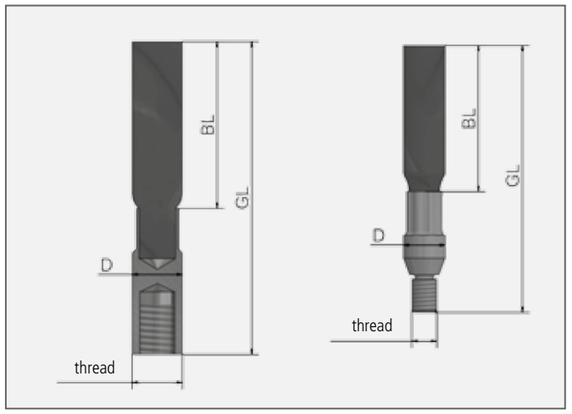

Item Nos. in bold are available ex stock.
Consider our minimum order value for *italic printed* article numbers (see page 148).

High Performance Filament Brush

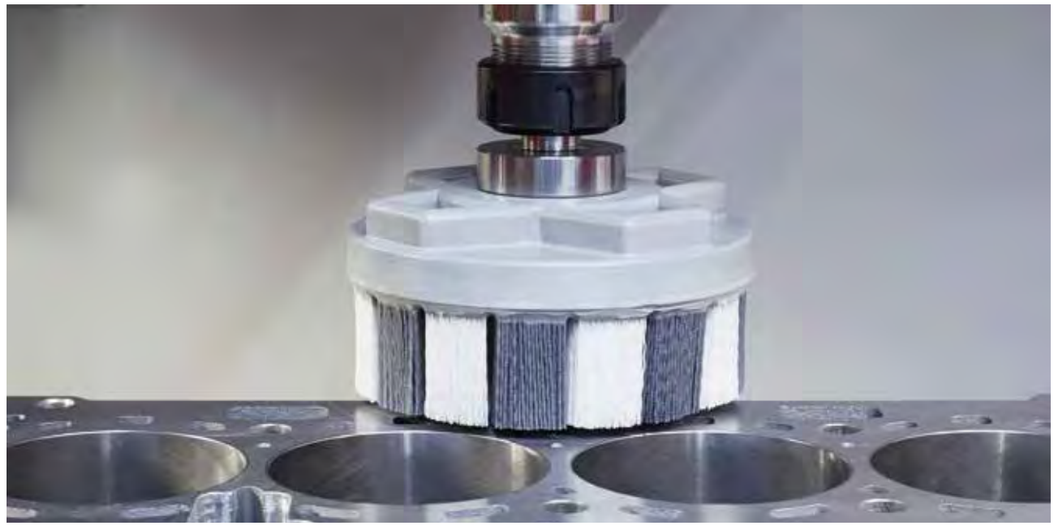

HFB Disc Brushes
LESSMANN high performance surface finishing tools achieve excellent deburrings and edge radiusing on exterior and interior areas of work pieces. Next to the applications in machining centers, especially in linear deburring and finishing lines with planetary brush systems HFB brushes obtain high efficiency.

They are used for e.g. for the deburring of
- blanked parts
- sintered parts
- hydraulic and pneumatic work pieces
- aluminium work pieces
- and many more

Also work pieces which are exposed to high pressures demand precise egde radiuses. LESSMANN HFB brushes are ideal tools which achieve these requirements outstandingly.

In a special production process LESSMANN HFB brushes are manufactured with a very high filling density. Available are high abrasvie nylons with silicon carbide, ceramic or diamond grit.
Due to the application orientated selection of the filling materials an excellent deburring and constant edge radiusing in a short working time is achieved. Depending on the application HFB brushes can be used under dry or wet conditions.

Typically in LESSMANN HFB Brushes high quality filling material is used. It is very bending resistant and low-abrasion, besides it is very appropriate for working under wet conditions.

Depending on the requirements the brushes can be produced with individual filling fields. Full filament but also a fragmentation in predefined fields or a deviation of the bristles is possible.
On the customer's demand LESSMANN produces brushes for all machine brands. Our basic executions suitable for all common machines are deliverable within short-term.
Please contact us for further information!

Typical work pieces which are treated with LESSMANN HFB brushes.

HFB Disc Brushes, Dense Filament

Body Ø DA	Body Thikness KD	Trim Length BH	Bore B	open space D2	RPM max.	suitable for	Pack.	SIC K 60 Art.-No.	SIC K 80 Art.-No.	SIC K 120 Art.-No.	SIC K 180 Art.-No.	SIC K 320 Art.-No.
50	15	25	6-kant	21	3,600	adapter 600.000.83	1	*601.131.10**	*601.231.10**	*601.331.10**	*601.431.10**	*601.531.10**
75	15	25	4-kant	30	3,600	adapter 600.000.84	1	*602.141.10**	*602.241.10**	*602.341.10**	*602.441.10**	*602.541.10**
100	15	35**	4-kant	43	3,600	adapter 600.000.84	1	*603.141.10**	*603.241.10**	*603.341.10**	*603.441.10**	*603.541.10**
125	15	35**	4-kant	58	3,000	adapter 600.000.84	1	*604.141.10**	*604.241.10**	*604.341.10**	*604.441.10**	*604.541.10**
125	15	40**	18	58	3,000		1	*604.181.10**	*604.281.10**	*604.381.10**	*604.481.10**	*604.581.10**
150	28	40**	18	58	2,500		1	*605.181.10**	*605.281.10**	*605.381.10**	*605.481.10**	*605.581.10**
150	28	25	25/35/+MN	58	2,500		1	*605.151.10**	*605.251.10**	*605.351.10**	*605.451.10**	*605.551.10**

HFB Adapters

Shaft diameter	Total Length **GL**	Thread	Bore	Art.-No.
12h6	103	M16x1,5	Hexagonal	*600.000.83**
12h6	103	M16x1,5	Square	*600.000.84**

* Article on request.

LESSMANN Adapters
(Square and Hexagonal).
Delivery includes 1 aluminium plate,
1 disc, 2 hex nuts.

On request we produce the brushes referred to your hole pattern. For this purpose please send us a drawing with measurements.

** For the treatment of ductile or strong materials and when using high peripheral speeds a stabilization sleeve can be mounted. It causes a better stabilization and prevents a disperse of the filling material.

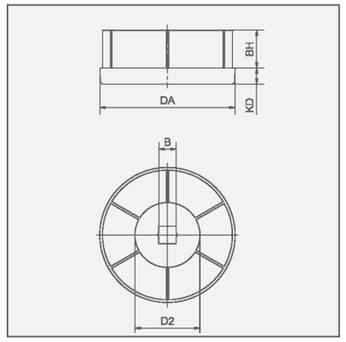

Item Nos. in bold are available ex stock.
Consider our minimum order value for *italic printed* article numbers (see page 148).

SIC = silicon carbide bristles

Staple Set Brushes

Staple Set Brushes
For applications with little mechanic load, brushes in a staple set edition are produced.
Typical applications for staple set Wheel Brushes and Wide Face Brushes, Disc Brushes or Lath Brushes are for example cleaning, deburring, surface finishing, structurizing, smoothing, transporting, sorting or moistening.
Depending on the requirements, the filling material can be fixed individually into the body. The distance of the bundles are variable and comply with the application.
As filling material next to different wires also fibres are available. Also mixed filament in various mixing proportions are possible.
Disc Brushes usually are delivered with thread or bore.
Staple set wheel and roller brushes are produced with bore or arbour absorption, depending on the customers' specification.

Please inform yourself on the following pages and do not hesitate to contact us for personal advice!

Possible desities of brush filling material
for Wheel Brushes and Wide Face Brushes, Disc Brushes and Lath Brushes

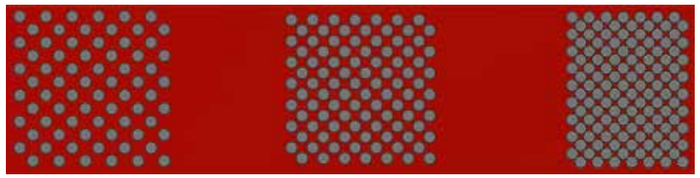

thin filling material — mean desity of filling material — dense filling material

Possible placement of brush filling material
for Wheel Brushes and Wide Face Brushes, Disc Brushes and Lath Brushes

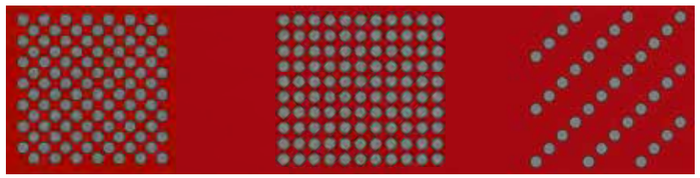

staggered filling material — straight filling material — spiral filling material

Disc Brushes

Disc Brushes – Measurements

DK External diameter mm	KD Body height mm	BH Trim height mm	Deviation of the Bristles	B/G Thread	Body Material	Trim Material	Trim Density
10 - 800	10 - 100	8 - 95 steel 8 - 135 Plastic	max. 35°	freely selectable	PP, PE, PA, Wood, Plywood	STA, STM, MES, ROF, PP, PE, PA, FIB, ROS, SIC, AO	thin, mean, dense

Disc Brushes – for cleaning and deburring
Disc Brushes are used for the treatment of plane surfaces on almost every material. The numerous variations of body and trimming materials and adapter systems make them for all purposes applicable.
For deburring working pieces, disc brushes can be inserted in individual equipments as well as in machining centres for removing secondary burrs.

Disc Brushes for the wood machining industry
Disc brushes used for the wood machining industry have a very long filling material (SIC). Used on angle grinders, the disc brushes are ideal for maintaining, cleaning, structuring or polishing wood.
The brushes are very effective when working on large surfaces.

Circular Discs – Standard Body
If your application allows the mentioned sizes, we recommend our standard bodies.

The inquiry form for disc brushes you find on page 137 or at www.lessmann.com

Item Nos. in bold are available ex stock.
Consider our minimum order value for *italic printed* article numbers (see page 148).

STA	=	steel wire
STM	=	brass coated steel
ROF	=	stainless steel wire
MES	=	brass wire
PP	=	polypropylene
PA	=	polyamide
PE	=	polyethylene
FIB	=	fibre
ROS	=	horse hair
SIC	=	silicon carbide bristles
AO	=	aluminium oxide bristles

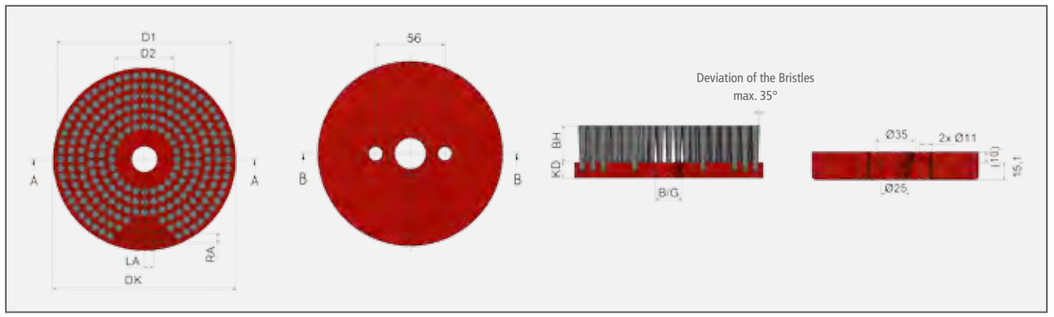

Disc Brushes

Disc Brushes

	Filling	DK mm | *inch*	KD mm | *inch*	Filling height mm | *inch*	Bore/ Thread mm | *inch*	RPM max.	Art.-No.
	STA 0.20 | *0.008"*	150 | *6*	25 | *1*	25 | *1*	M 14	2,000	**405.006**
	SIC 180/1.0	125 | *5*	25 | *1*	25 | *1*	22.2 | *7/8*	3,000	*405.854*
	SIC 180/1.0	150 | *6*	25 | *1*	20 | *3/4*	25 | *1*	2,000	*405.835*
	SIC 120/1.1	150 | *6*	25 | *1*	25 | *1*	25 | *1*	2,000	*405.864*
1	**Mixed filament STA** 0.30 / **PA** 0.35	130 | *5 1/8*	25 | *1*	40 | *1 3/8*	M 14	2,500	*405.908*
1	**Mixed filament STA** 0.30 / **PA** 0.35	200 | *8*	25 | *1*	40 | *1 3/8*	M 14	1,500	*405.905*

2 Disc Brushes for the wood machining

Filling	DK mm | *inch*	KD mm | *inch*	Filling height mm | *inch*	Thread	RPM max.	Pack.	Art.-No.
SIC 46/1.6	130 | *5 1/8*	20 | *3/4*	50 | *2*	M 14	2,500	1	*405.843*
SIC 60/1.5	130 | *5 1/8*	20 | *3/4*	50 | *2*	M 14	2,500	1	*405.844*
SIC 80/1.2	130 | *5 1/8*	20 | *3/4*	50 | *2*	M 14	2,500	1	**405.845**

Circular Discs – Standard Body – Measurements (in Stock) Body Material PP (red)

DK mm | *inch*	KD mm | *inch*	Bore B / Thread G
130 | *5 1/8*	20 | *3/4*	Bore 22,5 / 19
150 | *6*	25 | *1*	Bore 12
150 | *6*	25 | *1*	Bore 35 / 25, mounting hole 2 x ø11, TK 56
180 | *7*	18 | *5/8*	Thread M12
180 | *7*	18 | *5/8*	Thread M12 left
200 | *8*	25 | *1*	Bore 12
200 | *8*	25 | *1*	Bore 35 / 25, mounting hole 2 x ø11, TK 56
220 | *8 5/8*	20 | *3/4*	Bore 40

The standard bodies can be adapted on demand (dress to size, drill) for receiving other measurements.

Item Nos. in bold are available ex stock.
Consider our minimum order value for *italic printed* article numbers (see page 148).

STA = steel wire
PA = polyamide
SIC = silicon carbide bristles

Enquiry for Circular Discs

Drawing / description of application

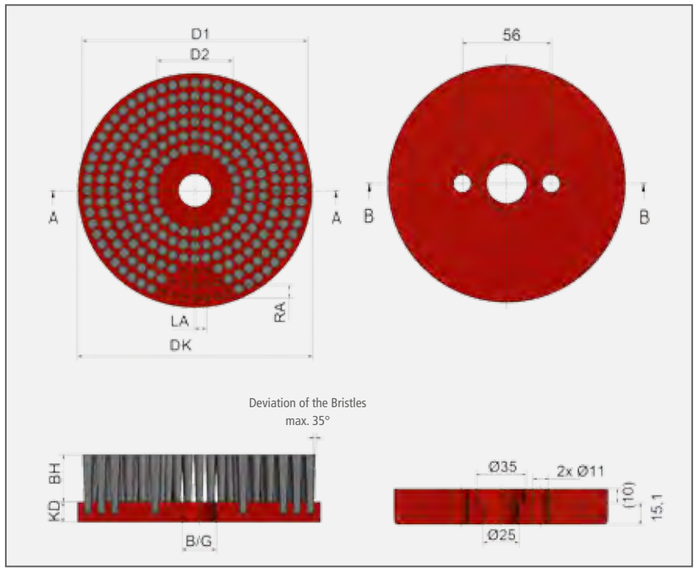

sender: company, contact person

Inquiries and Infos:
Phone: +49 9082 707-0 info@lessmann.com
Fax: +49 9082 707-76 www.lessmann.com

Piece number:_____

Brush Application ☐ dry ☐ wet
- ☐ deburring
- ☐ cleaning
- ☐ roughening / structuring
- ☐ transporting
- ☐ others

Material; _____°C Temperature
- ☐ steel
- ☐ aluminium
- ☐ wood
- ☐ stainless steel
- ☐ plastic
- ☐ others

Filling material
- ☐ steel
- ☐ brass coated steel
- ☐ brass
- ☐ stainless steel
- ☐ PP
- ☐ PA
- ☐ PE
- ☐ abrasive filament (SIC)
- ☐ abrasive filament (AO)
- ☐ fibre
- ☐ horsehair

Diameter of filling material _____

Filling density
- ☐ thin
- ☐ mean
- ☐ dense

Filling placement

☐ **full-body** ☐ **fields** ☐ **turbo**

Please mention measurements according to drawing

DK external diameter_____ mm
D1 dia trim outside _____ mm
D2 dia trim inside _____ mm
KD body height _____ mm
B/G bore/thread _____ mm
BH trim height_____ mm
RA row distance _____ mm
LA hole distance _____ mm
BO bundle bore _____ mm
Number of rows _____

Body
- ☐ PP
- ☐ PE
- ☐ PA
- ☐ wood

Lath Brushes

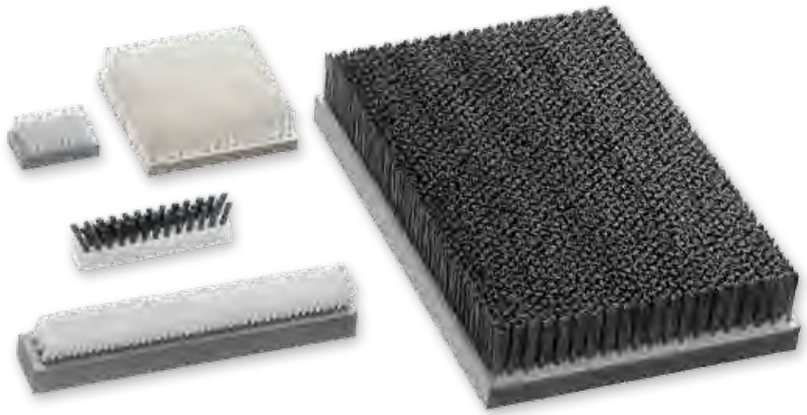

Lath Brushes – Measurements

KB Body Width mm	GL Total Length mm	KD Body Size mm	BH Trim Length mm	Deviation of the Bristles	Body Material	Filling Material	Filling Density
8 - 750	8 - 2400	10 - 100	8 - 95 Steel 8 - 135 Plastic	max. 35°	PP, PE, PA, Wood, Stack wood	STA, STM, MES, ROF, PP, PE, PA, FIB, ROS, SIC, AO	thin, mean, dense

Lath Brushes
Lath Brushes work in machines and are used for clearing, cleaning, insulating and discharging electric charges etc. Various body materials are possible: including wood and plastic.
The filling material can be manifold and goes from fine horsehair to firm steel wire. Through the deviation of the bristles until 35° the lath bushes are very flexible in their applications.

As required the stocked standard bodies could be reworked (turned, drilled out) to get further dimensions

Item Nos. in bold are available ex stock.
Consider our minimum order value for *italic printed* article numbers (see page 148).

STA	= steel wire
STM	= brass coated steel
ROF	= stainless steel wire
MES	= brass wire
PP	= polypropylene
PA	= polyamide
PE	= polyethylene
FIB	= fibre
ROS	= horse hair
SIC	= silicon carbide bristles
AO	= aluminium oxide bristles

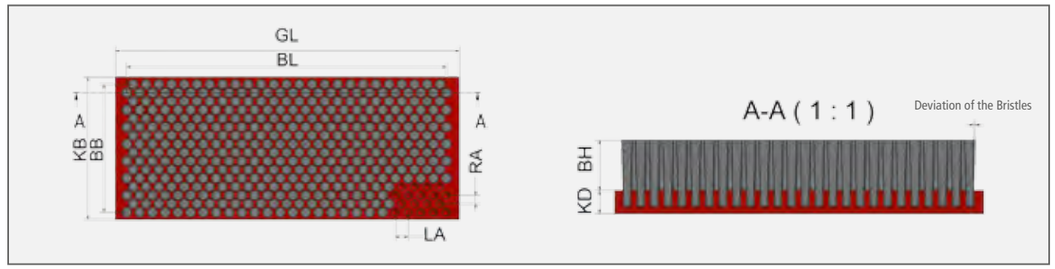

Enquiry for Lath Brushes

Drawing / description of application

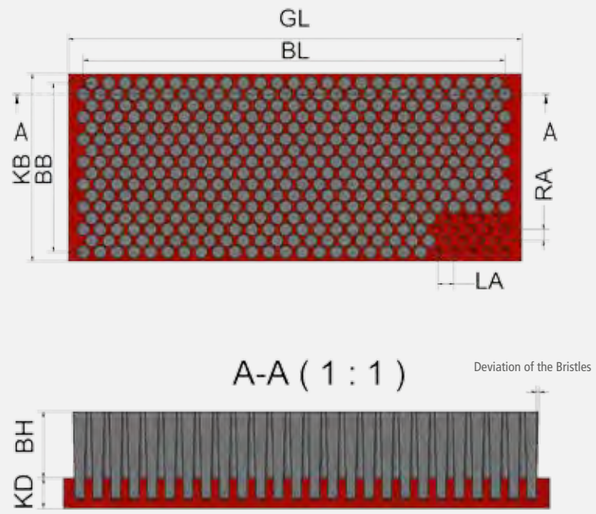

sender: company, contact person

Inquiries and Infos:
Phone: +49 9082 707-0 info@lessmann.com
Fax: +49 9082 707-76 www.lessmann.com

Piece number:_____

Brush Application ☐ dry ☐ wet
- ☐ deburring
- ☐ cleaning
- ☐ roughening / structuring
- ☐ transporting
- ☐ others

Material; _____°C Temperature
- ☐ steel
- ☐ aluminium
- ☐ wood
- ☐ stainless steel
- ☐ plastic
- ☐ others

Filling material
- ☐ steel
- ☐ brass coated steel
- ☐ brass
- ☐ stainless steel
- ☐ PP
- ☐ PA
- ☐ PE
- ☐ abrasive filament (SIC)
- ☐ abrasive filament (AO)
- ☐ fibre
- ☐ horsehair

Diameter of filling material _____

Filling density
- ☐ thin
- ☐ mean
- ☐ dense

Filling placement

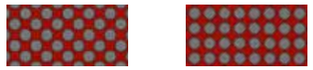

☐ **staggered** ☐ **straight**

Please mention measurements according to drawing

GL	total length	_____	mm
KB	total width	_____	mm
KD	body height	_____	mm
BH	trim height	_____	mm
BL	trim length	_____	mm
BB	trim width	_____	mm
RA	row distance	_____	mm
LA	hole distance	_____	mm
BO	bundle bore	_____	mm

Body
- ☐ PP
- ☐ PE
- ☐ PA
- ☐ wood

Wheel Brushes and Wide Face Brushes

Staple Set Wheel and Roller Brushes – Measurements

DA Total Diameter mm	DK Body Diameter mm	GL Total Width mm	BL Trim Lenght mm	B Bore mm	Body Material	Filling Material	Filling Density
45 - 440 steel 45 - 500 plastic	25 - 250	5 - 800	3 - 780	freely selectable	PP, PE, PA, Wood	STA, STM, MES, ROF, PP, PE, PA, FIB, ROS, SIC, AO	thin, mean, dense

Standard body diameter (on stock) in body material PP

50, 80, 100, 140

Staple Set Wheel and Roller Brushes
These brushes are used for cleaning, deburring, surface finishing, structurizing, smoothing and transporting.
The brush body is of wood or plastic. The filling material is determined by the brushes purpose. Please also consider temperature, chemical and mechanical characteristics during use. Filling lenght, filling material, filling diameter and filling density are significant for the mode of action of the brush.
The density of the filling material can be varied by the diameter and the distance of and from the hole.
The staple set wheel and roller brushes are available with bore or arbor absorption, depending on the customers' specification.
The mentioned data in the chart should support you defining the right brush for your application.
For further information or support do not hesitate to contact us by e-mail, phone or fax. We will be very pleased to support you.

Note:
For applications which have a high mechanical load on the brushes we advise our wheel and roller brushes with crimped or knotted wire (page 47).

As required the stocked standard bodies could be reworked (turned, drilled out) to et further dimensions

Item Nos. in bold are available ex stock.
Consider our minimum order value for *italic printed* article numbers (see page 148).

STA	= steel wire
STM	= brass coated steel
ROF	= stainless steel wire
MES	= brass wire
PP	= polypropylene
PA	= polyamide
PE	= polyethylene
FIB	= fibre
ROS	= horse hair
SIC	= silicon carbide bristles
AO	= aluminium oxide bristles

Enquiry for Wheel Brushes / Wide Face Brushes

Drawing / description of application

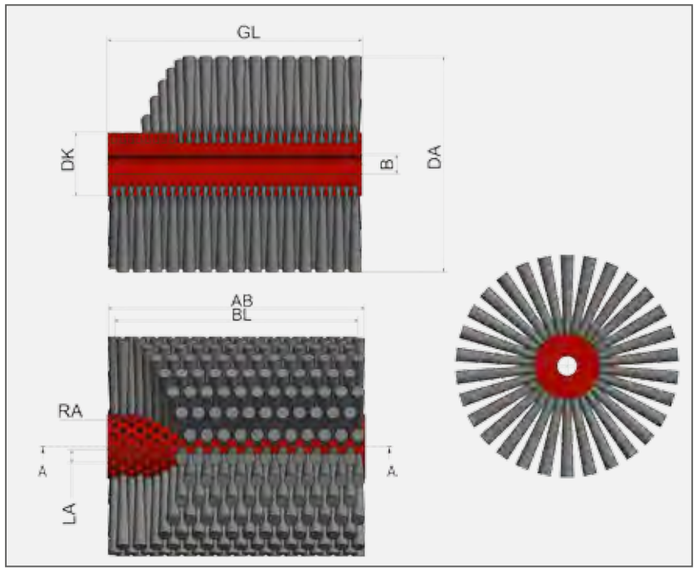

sender: company, contact person

Inquiries and Infos:
Phone: +49 9082 707-0 info@lessmann.com
Fax: +49 9082 707-76 www.lessmann.com

Piece number:_____

Brush Application ☐ dry ☐ wet
- ☐ deburring
- ☐ cleaning
- ☐ roughening / structuring
- ☐ transporting
- ☐ others

Material _____°C Temperature
- ☐ steel
- ☐ aluminium
- ☐ wood
- ☐ stainless steel
- ☐ plastic
- ☐ others

Filling material
- ☐ steel
- ☐ brass coated steel
- ☐ brass
- ☐ stainless steel
- ☐ PP
- ☐ PA
- ☐ PE
- ☐ abrasive filament (SIC)
- ☐ abrasive filament (AO)
- ☐ fibre
- ☐ horsehair

Diameter of filling material _____

Filling density
- ☐ thin
- ☐ mean
- ☐ dense

Filling placement

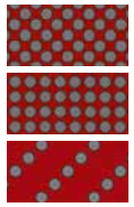

- ☐ **staggered**
- ☐ **straight**
- ☐ **spiral**

Please mention measurements according to drawing

DA	Total Diameter	_____	mm
KD	Body Diameter	_____	mm
GL	Total Width	_____	mm
AB	Working lenght	_____	mm
BL	Trim Lenght	_____	mm
B	Bore	_____	mm
RA	row distance	_____	mm
LA	hole distance	_____	mm
BO	bundle bore	_____	mm

Body
- ☐ PP
- ☐ PE
- ☐ PA
- ☐ wood

Strip Brushes

Strip Brushes
Strip brushes are mainly used as cover in association with moving parts. They insulate doors and windows or help to keep moving parts on machines clean. There are many forms and profiles, with or without holders. Therefore, please indicate full measurements and holder details when ordering.
The profile can be made of steel, aluminium or plastic. The filling material can be bristles or steel wire.

Brushes for deburring machines
Special Strip Brushes as component part of deburring machines.

The inquiry form for strip brushes you find at www.lessmann.com

Required measurements and data:
GH total height
BH filling length
RB back width
shape of fixing

Filling Material:
STA, STM, MES, ROF, PP, PE, PA, FIB, ROS

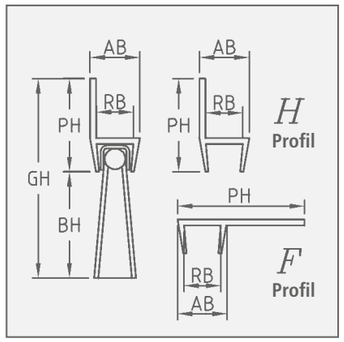

Item Nos. in bold are available ex stock.
Consider our minimum order value for *italic printed* article numbers (see page 148).

STA	= steel wire
STM	= brass coated steel
ROF	= stainless steel wire
MES	= brass wire
PP	= polypropylene
PA	= polyamide
PE	= polyethylene
FIB	= fibre
ROS	= horse hair

Strip Brushes with H profile, aluminium

mounting	GH	PH	BH	AB	RB	Total length	Pack.	**PA 0.30** | *0.012"*	**STA**	**ROF**	**Horsehair**
	mm | *inch*		mm | *inch*			mm | *inch*		Art.-No.	Art.-No.	Art.-No.	Art.-No.
H-Profile	50 | *2*	25	25 | *1*	8	5	1,000 | *40*	5	**052.881**	**051.360**	**051.558**	*051.021*
H-Profile	90 | *3 1/2*	40	50 | *2*	12	8	1,000 | *40*	5	**052.891**	**051.348**	**051.547**	available on demand
H-Profile	65 | *2 1/2*	40	25 | *1*	12	8	1,000 | *40*	5		*051.324*		

Strip Brushes for deburring machines

mounting	GH	BH	Total length	**PA 0.35** | *0.014"*
	mm | *inch*	mm | *inch*	mm | *inch*	Art.-No.
Steel plate zinc coated	40 | *1 3/8*	35 | *1 1/2*	500 | *20*	*052.860*
Steel plate zinc coated	40 | *1 3/8*	35 | *1 1/2*	600 | *23 5/8*	*052.868*

Other dimensions on inquiry.
You find an inquiry form for strip brushes on www.lessmann.com

Article Numbers

Art. No. Page

000041 39
000042 39
000043 39
000044 39
000045 39
000071 115
000072 115
000311 89
000321 89
000323 89
000331 89
000501 125
000503 125
000506 125
000507 125
000631 39
000641 39
000651 39
000661 39
000671 39
00088663 39
00088664 39
00088665 39
00088668 39
00088832 39
001211 39,115
001212 39,115
001215 39,115
001222 39,115
001225 39,115
037101 89
037200 89
037201 89
037201CC 123
037221 89
037710 89
045301 117
045910 117
045915 117
047700 131
047705 131
047707 131
047708 131
047750 131
047754 131
047755 131
047757 131
047801 131
048081 49
048241 49
048271 49
048291 49
048441 49
048471 49
048491 49
048701 49
048821 49
048841 49
048851 49
048901 49
048941 49
048998 49
048999 49
051021 143
051324 143
051348 143
051360 143
051547 143
051558 143
052860 143
052868 143
052881 143
052891 143
056001 83
056301 83
056501 83
056701 83
061101 89
064050 89
100011 81
100020 81
100021 81
100021CC 123
100030 81
100031 81
100031CC 123
100040 81
100041 81
100041CC 123
100050 81
100051 81
100051CC 123
100061 81
100061CC 123
102431 81
102441 81
102611 81
102621 1
102631 81
102641 81
102651 81
102661 81
103711 81
103721 81
103731 81
103741 81
103751 81
103761 81
104321 81
104331 81
104341 81
104351 81
104421 81
104431 81
104441 81
104451 81
104611 81
104621 81
104630 81
104631 81
104631CC 123
104640 81
104641 81
104641CC 123
104651 81
104661 1
105420 81
105421 81
105431 81
105440 81
105441 81
105451 81
105461 81
105721 81
105731 81
105741 81
106621 81
106631 81
106641 81
106651 81
107321 81
107331 81
107341 81
107351 81
107411 81
107421 81
107431 81
107441 81
107631 81
107631CC 123
107641 81
107641CC 123
107651 81
107661 81
108331 81
108341 81
108351 81
109431 81
109441 81
109451 81
109741 81
120401 83
120401CC 123
120412 83
120601 83
120801 83
120801CC 123
120811 83
120811CC 123
120831 83
121111 88
121211 88
122401 83
122801 83
122821 83
124101 93
124121 93
124201 93
124301 93
124401 93
124801 93
124801CC 123
125111 84
125201 84
125211 84
125211CC 123
125221 84
125231 84
125234 84
125241 84
125251 84
125311 84
125511 84
125521 84
126311 85
126401 85
126411 85
126411CC 123
126431 85
126441 85
126451 85
126451CC 123
126472 85
126481 85
126511 85
126611 85
126811 85
132701 85
132801 84
136101 83
136102 83
136103 3
137701 85
138704 85
138705 85
140201 87
140641 87
140811 87
140901 87
141231 87
141421 87
142101 89
142211 89
144001 88
144001CC 123
144011 88
144021 88
144111 88
144121 88
144211 88
144311 88
144411 88
144701 88
144701CC 123
144801 88
146101 91
146201 91
146241 91
146301 91
146341 91
147101 91
147200 91
147201 91
147261 91
147301 91
147401 91
148101 91
148141 91
148161 91
148201 91
148601 91
151108 95
151109 95
151511 95
15199107 95
15199507 95
152510 95
152811 87
15299507 95
182001 84
182152 85
182162 85
182172 84
182331 82
182401 82
182401CC 123
182411 82
182421 82
182431 82
182451 82
182451CC 123
182807 85
182811 85
183704 85
183706 85
184101 117
184104 117
185121 82
185131 82
185141 82
185151 2
185421 82
185431 82
185431CC 123
185441 82
185451 82
185621 82
185631 82
185641 82
185651 82
185811 83
186431 82
300091 35
300102 121
300742 5
300771KG 23
30121310 35
30121315 35
30121320 35
30121330 35
30121415 35
30121420 35
30121430 35
30122515 35
30122520 35
30122525 35
30122530 35
30123620 35
30123630 35
30436114 59
30476114 59
310141 26
310161 26
310341 27
310361 27
310841 25
310851 25
310871 25
311741 26
311762 35
312141 35
312142 29
312143 29
312162 29
312163 29
312342 30
312362 30
312363 30
312542 31
312543 31
312562 31
312563 31
32000K17 35
320001 35
320003 35
320004 35
320009 35
320061 35
320102 121
320141 26
320161 37
32016K17 35
320341 27
32034119 33
320361 27
32070319 33
320707 26
320821 25
32082119 33
320841 25
320851 25
320871 25
323002 35
323003 35
323132 29
323133 29
323142 29
323143 29
323162 29
323163 29
33230519 33
323342 30
323343 30
32334819 33
323362 30
323363 30
323542 31
323543 31
323562 31
323563 31
32370419 33
32370519 33
32377013 33
32380519 33
32382013 33
32382819 33
32383013 33
32390010 33
330001 35
330141 26
330161 26
330341 27
330361 27
330821 25
330841 25
330851 25
330871 25
331161 26
331361 27
334132 29
334142 29
334143 29
334162 29
334163 29
334342 30
334343 30
334362 30
334363 30
334542 31
334543 31
334562 31
33536114 59
33576114 59
340141 26
340161 26
340341 27
340361 27
340707 26
340821 25
340831 25
340841 25
340851 25
340871 25
344132 29
344133 29
344142 29
344143 29
344172 29
344173 29
344342 30
344362 30
344363 30
344542 31
344543 31
344562 31
344563 31
345132 29
345133 29
345142 29
345143 29
345162 29
345163 29
345342 30
345343 30
345362 30
345363 30
345542 31
345543 31
345562 31
345563 31
366142 29
366143 29
366162 29
366163 29
366342 30
366343 30
366362 30
366363 30
377006 43
377077 43
377089 44
377089T1 44
377089TA 44
377090 44
377091 45
377093 44
377094 44
377094T1 44
377094TA 44
377095 43
377096 43
377097 44
377099 44
377142 29
377143 29
377144 29
377162 29
377163 29
377164 29
37724030 47
37724046 47
37724060 47
37727030 47
37727046 47
37727060 47
37729030 47
37729046 47
37729060 47
377342 30
377343 30
377362 30
377363 30
37744030 47
37744046 47
37744060 47
37747030 47
37747046 47
37747060 47
37749030 47
37749046 47
37749060 47
377562 31
377707 44
37770700 44
377707T1 44
377707TA 44
377762 29
37778030 47
37778046 47
37778060 47
377824 45
37782400 45
377824T1 45
377824TA 45
37783030 47
37783046 47
37783060 47
377835 45
37783500 45
377835T1 45
377835TA 45
377837 45
377839 45
377854 45
37785400 45
377854T1 45
377854TA 45
377875 45
37787500 45
377875T1 45
377875TA 45
37E137 37
37E147 37
37E336 37
380141 26
380161 26
380341 27
380361 27
380841 25
380871 25
381161 26
381361 27
381831 25
381841 25
381851 25
381871 25
387051 43
387053 43
387054 43
387055 43
387142 29
387162 29
387163 29
387824 45
387825 45
387827 45
387831 45
387841 45
387851 45
387871 45
387881 45
387891 45
387901 45
387911 45
387921 45
387931 45
387941 45
387951 45
387961 45
387971 45
387981 45
387991 45
388001 45
388011 45
388021 45
388031 45
388041 45
388051 45
388061 45
388071 45
388081 45
388091 45
388101 45
388111 45
388121 45
388131 45
388141 45
388151 45
388161 45
388171 45
388181 45
388191 45
388201 45
388211 45
388221 45
388231 45
388241 45
388251 45
388261 45
388271 45
388281 45
388291 45
388301 45
388311 45
388321 45
388331 45
388341 45
388351 45
388361 45
388371 45
388381 45
388391 45
388401 45
388411 45
388421 45
388431 45
388441 45
388451 45
388461 45
388471 45
388481 45
388491 45
388501 45
388511 45
388521 45
388531 45
388541 45
388551 45
388561 45
388571 45
388581 45
388591 45
388601 45
388611 45
388621 45
388631 45
388641 45
388651 45
388661 45
388671 45
388681 45
388691 45
388701 45
388711 45
388721 45
388731 45
388741 45
388751 45
388761 45
388771 45
388781 45
388791 45
388801 45
388811 45
388821 45
388831 45
388841 45
388851 45
388861 45
388871 45
388881 45
388891 45
388901 45
388911 45
388921 45
388931 45
388941 45
388951 45
388961 45
388971 45
388981 45
388991 45
389001 45
389011 45
389021 45
389031 45
389041 45
389051 45
389061 45
389071 45
389081 45
389091 45
389101 45
389111 45
389121 45
389131 45
389141 45
389151 45
389161 45
389171 45
389181 45
389191 45
389201 45
389211 45
389221 45
389231 45
389241 45
389251 45
389261 45
389271 45
389281 45
389291 45
389301 45
389311 45
389321 45
389331 45
389341 45
389351 45
389361 45
389371 45
389381 45
389391 45
389401 45
389411 45
389421 45
389431 45
389441 45
389451 45
389461 45
389471 45
389481 45
389491 45
389501 45
389511 45
389521 45
389531 45
389541 45
389551 45
389561 45
389571 45
389581 45
389591 45
389601 45
389611 45
389621 45
389631 45
389641 45
389651 45
389661 45
389671 45
389681 45
389691 45
389701 45
389711 45
389721 45
389731 45
389741 45
389751 45
389761 45
389771 45
389781 45
389791 45
389801 45
389811 45
389821 45
389831 45
389841 45
389851 45
389861 45
389871 45
389881 45
389891 45
389901 45
389911 45
389921 45
389931 45
389941 45
389951 45
389961 45
389971 45
389981 45
389991 45
390001 45
390011 45
390021 45
390031 45
390041 45
390051 45
390061 45
390071 45
390081 45
390091 45
390101 45
390111 45
390121 45
390131 45
390141 45
390151 45
390161 45
390171 45
390181 45
390191 45
390201 45
390211 45
390221 45
390231 45
390241 45
390251 45
390261 45
390271 45
390281 45
390291 45
390301 45
390311 45
390321 45
390331 45
390341 45
390351 45
390361 45
390371 45
390381 45
390391 45
390401 45
390411 45
390421 45
390431 45
390441 45
390451 45
390461 45
390471 45
390481 45
390491 45
390501 45
390511 45
390521 45
390531 45
390541 45
390551 45
390561 45
390571 45
390581 45
390591 45
390601 45
390611 45
390621 45
390631 45
390641 45
390651 45
390661 45
390671 45
390681 45
390691 45
390701 45
390711 45
390721 45
390731 45
390741 45
390751 45
390761 45
390771 45
390781 45
390791 45
390801 45
390811 45
390821 45
390831 45
390841 45
390851 45
390861 45
390871 45
390881 45
390891 45
390901 45
390911 45
390921 45
390931 45
390941 45
390951 45
390961 45
390971 45
390981 45
390991 45
391001 45
391011 45
391021 45
391031 45
391041 45
391051 45
391061 45
391071 45
391081 45
391091 45
391101 45
391111 45
391121 45
391131 45
391141 45
391151 45
391161 45
391171 45
391181 45
391191 45
391201 45
391211 45
391221 45
391231 45
391241 45
391251 45
391261 45
391271 45
391281 45
391291 45
391301 45
391311 45
391321 45
391331 45
391341 45
391351 45
391361 45
391371 45
391381 45
391391 45
391401 45
391411 45
391421 45
391431 45
391441 45
391451 45
391461 45
391471 45
391481 45
391491 45
391501 45
391511 45
391521 45
391531 45
391541 45
391551 45
391561 45
391571 45
391581 45
391591 45
391601 45
391611 45
391621 45
391631 45
391641 45
391651 45
391661 45
391671 45
391681 45
391691 45
391701 45
391711 45
391721 45
391731 45
391741 45
391751 45
391761 45
391771 45
391781 45
391791 45
391801 45
391811 45
391821 45
391831 45
391841 45
391851 45
391861 45
391871 45
391881 45
391891 45
391901 45
391911 45
391921 45
391931 45
391941 45
391951 45
391961 45
391971 45
391981 45
391991 45
392001 45
392011 45
392021 45
392031 45
392041 45
392051 45
392061 45
392071 45
392081 45
392091 45
392101 45
392111 45
392121 45
392131 45
392141 45
392151 45
392161 45
392171 45
392181 45
392191 45
392201 45
392211 45
392221 45
392231 45
392241 45
392251 45
392261 45
392271 45
392281 45
392291 45
392301 45
392311 45
392321 45
392331 45
392341 45
392351 45
392361 45
392371 45
392381 45
392391 45
392401 45
392411 45
392421 45
392431 45
392441 45
392451 45
392461 45
392471 45
392481 45
392491 45
392501 45
392511 45
392521 45
392531 45
392541 45
392551 45
392561 45
392571 45
392581 45
392591 45
392601 45
392611 45
392621 45
392631 45
392641 45
392651 45
392661 45
392671 45
392681 45
392691 45
392701 45
392711 45
392721 45
392731 45
392741 45
392751 45
392761 45
392771 45
392781 45
392791 45
392801 45
392811 45
392821 45
392831 45
392841 45
392851 45
392861 45
392871 45
392881 45
392891 45
392901 45
392911 45
392921 45
392931 45
392941 45
392951 45
392961 45
392971 45
392981 45
392991 45
393001 45
393011 45
393021 45
393031 45
393041 45
393051 45
393061 45
393071 45
393081 45
393091 45
393101 45
393111 45
393121 45
393131 45
393141 45
393151 45
393161 45
393171 45
393181 45
393191 45
393201 45
393211 45
393221 45
393231 45
393241 45
393251 45
393261 45
393271 45
393281 45
393291 45
393301 45
393311 45
393321 45
393331 45
393341 45
393351 45
393361 45
393371 45
393381 45
393391 45
393401 45
393411 45
393421 45
393431 45
393441 45
393451 45
393461 45
393471 45
393481 45
393491 45
393501 45
393511 45
393521 45
393531 45
393541 45
393551 45
393561 45
393571 45
393581 45
393591 45
393601 45
393611 45
393621 45
393631 45
393641 45
393651 45
393661 45
393671 45
393681 45
393691 45
393701 45
393711 45
393721 45
393731 45
393741 45
393751 45
393761 45
393771 45
393781 45
393791 45
393801 45
393811 45
393821 45
393831 45
393841 45
393851 45
393861 45
393871 45
393881 45
393891 45
393901 45
393911 45
393921 45
393931 45
393941 45
393951 45
393961 45
393971 45
393981 45
393991 45
394001 45
394011 45
394021 45
394031 45
394041 45
394051 45
394061 45
394071 45
394081 45
394091 45
394101 45
394111 45
394121 45
394131 45
394141 45
394151 45
394161 45
394171 45
394181 45
394191 45
394201 45
394211 45
394221 45
394231 45
394241 45
394251 45
394261 45
394271 45
394281 45
394291 45
394301 45
394311 45
394321 45
394331 45
394341 45
394351 45
394361 45
394371 45
394381 45
394391 45
394401 45
394411 45
394421 45
394431 45
394441 45
394451 45
394461 45
394471 45
394481 45
394491 45
394501 45
394511 45
394521 45
394531 45
394541 45
394551 45
394561 45
394571 45
394581 45
394591 45
394601 45
394611 45
394621 45
394631 45
394641 45
394651 45
394661 45
394671 45
394681 45
394691 45
394701 45
394711 45
394721 45
394731 45
394741 45
394751 45
394761 45
394771 45
394781 45
394791 45
394801 45
394811 45
394821 45
394831 45
394841 45
394851 45
394861 45
394871 45
394881 45
394891 45
394901 45
394911 45
394921 45
394931 45
394941 45
394951 45
394961 45
394971 45
394981 45
394991 45
395001 45
395011 45
395021 45
395031 45
395041 45
395051 45
395061 45
395071 45
395081 45
395091 45
395101 45
395111 45
395121 45
395131 45
395141 45
395151 45
395161 45
395171 45
395181 45
395191 45
395201 45
395211 45
395221 45
395231 45
395241 45
395251 45
395261 45
395271 45
395281 45
395291 45
395301 45
395311 45
395321 45
395331 45
395341 45
395351 45
395361 45
395371 45
395381 45
395391 45
395401 45
395411 45
395421 45
395431 45
395441 45
395451 45
395461 45
395471 45
395481 45
395491 45
395501 45
395511 45
395521 45
395531 45
395541 45
395551 45
395561 45
395571 45
395581 45
395591 45
395601 45
395611 45
395621 45
395631 45
395641 45
395651 45
395661 45
395671 45
395681 45
395691 45
395701 45
395711 45
395721 45
395731 45
395741 45
395751 45
395761 45
395771 45
395781 45
395791 45
395801 45
395811 45
395821 45
395831 45
395841 45
395851 45
395861 45
395871 45
395881 45
395891 45
395901 45
395911 45
395921 45
395931 45
395941 45
395951 45
395961 45
395971 45
395981 45
395991 45
396001 45
396011 45
396021 45
396031 45
396041 45
396051 45
396061 45
396071 45
396081 45
396091 45
396101 45
396111 45
396121 45
396131 45
396141 45
396151 45
396161 45
396171 45
396181 45
396191 45
396201 45
396211 45
396221 45
396231 45
396241 45
396251 45
396261 45
396271 45
396281 45
396291 45
396301 45
396311 45
396321 45
396331 45
396341 45
396351 45
396361 45
396371 45
396381 45
396391 45
396401 45
396411 45
396421 45
396431 45
396441 45
396451 45
396461 45
396471 45
396481 45
396491 45
396501 45
396511 45
396521 45
396531 45
396541 45
396551 45
396561 45
396571 45
396581 45
396591 45
396601 45
396611 45
396621 45
396631 45
396641 45
396651 45
396661 45
396671 45
396681 45
396691 45
396701 45
396711 45
396721 45
396731 45
396741 45
396751 45
396761 45
396771 45
396781 45
396791 45
396801 45
396811 45
396821 45
396831 45
396841 45
396851 45
396861 45
396871 45
396881 45
396891 45
396901 45
396911 45
396921 45
396931 45
396941 45
396951 45
396961 45
396971 45
396981 45
396991 45
397001 45
397011 45
397021 45
397031 45
397041 45
397051 45
397061 45
397071 45
397081 45
397091 45
397101 45
397111 45
397121 45
397131 45
397141 45
397151 45
397161 45
397171 45
397181 45
397191 45
397201 45
397211 45
397221 45
397231 45
397241 45
397251 45
397261 45
397271 45
397281 45
397291 45
397301 45
397311 45
397321 45
397331 45
397341 45
397351 45
397361 45
397371 45
397381 45
397391 45
397401 45
397411 45
397421 45
397431 45
397441 45
397451 45
397461 45
397471 45
397481 45
397491 45
397501 45
397511 45
397521 45
397531 45
397541 45
397551 45
397561 45
397571 45
397581 45
397591 45
397601 45
397611 45
397621 45
397631 45
397641 45
397651 45
397661 45
397671 45
397681 45
397691 45
397701 45
397711 45
397721 45
397731 45
397741 45
397751 45
397761 45
397771 45
397781 45
397791 45
397801 45
397811 45
397821 45
397831 45
397841 45
397851 45
397861 45
397871 45
397881 45
397891 45
397901 45
397911 45
397921 45
397931 45
397941 45
397951 45
397961 45
397971 45
397981 45
397991 45
398001 45
398011 45
398021 45
398031 45
398041 45
398051 45
398061 45
398071 45
398081 45
398091 45
398101 45
398111 45
398121 45
398131 45
398141 45
398151 45
398161 45
398171 45
398181 45
398191 45
398201 45
398211 45
398221 45
398231 45
398241 45
398251 45
398261 45
398271 45
398281 45
398291 45
398301 45
398311 45
398321 45
398331 45
398341 45
398351 45
398361 45
398371 45
398381 45
398391 45
398401 45
398411 45
398421 45
398431 45
398441 45
398451 45
398461 45
398471 45
398481 45
398491 45
398501 45
398511 45
398521 45
398531 45
398541 45
398551 45
398561 45
398571 45
398581 45
398591 45
398601 45
398611 45
398621 45
398631 45
398641 45
398651 45
398661 45
398671 45
398681 45
398691 45
398701 45
398711 45
398721 45
398731 45
398741 45
398751 45
398761 45
398771 45
398781 45
398791 45
398801 45
398811 45
398821 45
398831 45
398841 45
398851 45
398861 45
398871 45
398881 45
398891 45
398901 45
398911 45
398921 45
398931 45
398941 45
398951 45
398961 45
398971 45
398981 45
398991 45
399001 45
399011 45
399021 45
399031 45
399041 45
399051 45
399061 45
399071 45
399081 45
399091 45
399101 45
399111 45
399121 45
399131 45
399141 45
399151 45
399161 45
399171 45
399181 45
399191 45
399201 45
399211 45
399221 45
399231 45
399241 45
399251 45
399261 45
399271 45
399281 45
399291 45
399301 45
399311 45
399321 45
399331 45
399341 45
399351 45
399361 45
399371 45
399381 45
399391 45
399401 45
399411 45
399421 45
399431 45
399441 45
399451 45
399461 45
399471 45
399481 45
399491 45
399501 45
399511 45
399521 45
399531 45
399541 45
399551 45
399561 45
399571 45
399581 45
399591 45
399601 45
399611 45
399621 45
399631 45
399641 45
399651 45
399661 45
399671 45
399681 45
399691 45
399701 45
399711 45
399721 45
399731 45
399741 45
399751 45
399761 45
399771 45
399781 45
399791 45
399801 45
399811 45
399821 45
399831 45
399841 45
399851 45
399861 45
399871 45
399881 45
399891 45
399901 45
399911 45
399921 45
399931 45
399941 45
399951 45
399961 45
399971 45
399981 45
399991 45
399991 45
399991

Art. No. Page

4752B176 ... 23
4752W176 .. 23
475311 17
475317 17
47572K 18
47573K 18
47574K 18
47580148 22
47580156 22
47580176 22
47580748 22
47580756 22
47580776 22
47580848 22
47580856 22
47580876 22
475811 17
475817 17
47582K 18
47583K 18
47584K 18
476111 17
47612K 18
47613K 18
47614K 18
47621051 17
476211 17
47622K 18
47623K 18
47624K 18
47625001 61
476250SM ... 61
47625101 61
476251SM ... 61
47626001 61
47626101 61
476311 17
47672K 18
47673K 18
47674K 18
47682K 18
47683K 18
47684K 18
47712K 18
47713K 18
47714K 18
47721075 17
47722K 18
47723K 18
47724K 18
47726001 61
47726101 61
47731075 17
47772K 18
47773K 18
47774K 18
47782K 18
47783K 18
47784K 18
47812K 18
47813K 18
47814K 18
47820006 19
47820008 19
47820010 19
47821075 17
47822506 19
47822508 19
47822510 19
47822K 18
47823K 18
47824K 18
47826001 61
47830006 19
47830008 19
47830010 19
47831075 17
47832506 19
47832508 19
47832510 19
47850006 19
47850008 19
47872K 18
47873K 18
47874K 18
47882K 18
47883K 18
47884K 18
47S20176 21
47S211 17
480117 52
480217 52
480717 55
482114 53
482117 53
48211709 .. 122
482117SM ... 53
482214 53
48221409 .. 122
482217 53
48221707 .. 124
48221709 .. 122
482217CC .. 123
482217SM ... 53
482217WZ .. 53
482317 53
482714 55
482717 55
482814 55
482817 55
48281709 .. 122
482817WZ .. 55
483117 53
483217 53
483230 69
483317 53
483817 55
484111 54
484117 54
484118 54
484211 54
484217 54
484218 54
484311 54
484317 54
484318 54
484711 55
484717 55
484718 55
484811 55
484817 55
484818 55
485137 53
485237 53
485237CC .. 123
485237SM ... 53
485337 53
486111 54
486117 54
486118 54
486148 53
486211 54
486217 54
486218 54
486237 53
486248 53
486311 54
486317 54
486318 54
486348 53
486711 55
486717 55
486718 55
486811 55
486817 55
486818 55
487111 54
487117 54
487118 54
487211 54
487217 54
487218 54
487237 53
487248 53
487311 54
487317 54
487318 54
487817 55
488237 53
488238 53
488248 53
499907 124
499921 124
4K7161 69
4K7361 69
4K9161 69
4K9361 69
500010 107
500016 107
500308 107
500310 107
500312 107
500313 107
500314 107
500315 107
500316 107
500318 107
500319 107
500320 107
500508 107
500510 107
500512 107
500513 107
500514 107
500515 107
500516 107
500518 107
500519 107
500520 107
500708 107
500710 107
500712 107
500713 107
500714 107
500715 107
500716 107
500718 107
500719 107
500720 107
500808 107
500810 107
500812 107
500813 107
500814 107
500815 107
500816 107
500818 107
500819 107
500820 107
501301 107
501501 107
501701 107
501801 107
50205024 .. 107
50205224 .. 107
50205524 .. 107
50205824 .. 107
50212003 .. 125
50212024 .. 108
50212224 .. 108
50212524 .. 108
50212824 .. 108
50242024 .. 108
50242224 .. 108
50242524 .. 108
50242824 .. 108
50272024 .. 108
50272224 .. 108
50272524 .. 108
50272824 .. 108
50282024 .. 108
50282224 .. 108
50282524 .. 108
503311 104
503313 104
503314 104
503316 104
503318 104
504301 05
504302 105
504333 105
504334 105
504335 105
504346 105
504347 105
50450106 .. 105
50450206 .. 105
50453306 .. 105
50453406 .. 105
50453506 .. 105
50454606 .. 105
50454706 .. 105
506101 105
50610103 .. 125
50610160 .. 109
506106 108
506130 108
506163 108
506169 108
506175 108
506188 108
506194 108
506211 108
506220 108
506330 113
506340 113
506363 113
506401 108
506406 108
506411 108
506430 108
506432 108
506435 108
506438 108
506440 108
506444 108
506450 108
506457 108
506463 108
506469 108
506475 108
506482 108
506488 108
506494 108
506701 108
506706 108
506711 108
506720 108
506730 108
506732 108
506735 108
506738 108
506740 108
506744 108
506750 108
506757 108
506763 108
506769 108
506775 108
506782 108
506788 108
506794 108
506801 108
506806 108
506811 108
506820 108
506830 108
506832 108
506835 108
506838 113
506840 108
506844 108
506850 108
506857 108
506860 113
506863 108
506869 108
506875 108
506882 108
506888 108
506894 108
507001 111
507002 111
507003 111
507004 111
507005 111
507006 111
50613003 .. 125
50613060 .. 109
506132 108
506135 108
50613503 .. 125
506138 108
506140 108
50614003 .. 125
50614060 .. 109
506144 108
506150 108
50615003 .. 125
50615060 .. 109
506157 108
50616060 .. 109
506163 108
50616303 .. 125
506169 108
506175 108
50617503 .. 125
50618060 .. 109
506182 108
506188 108
506194 108
506211 108
506220 108
506330 113
506340 113
506363 113
506401 108
506406 108
506411 108
506430 108
506432 108
506435 108
506438 108
506440 108
506444 108
506450 108
506457 108
506463 108
506469 108
506475 108
506482 108
506488 108
506494 108
506701 108
506706 108
506711 108
506720 108
506730 108
506732 108
506735 108
506738 108
506740 108
506744 108
506750 108
506757 108
506763 108
506769 108
506775 108
506782 108
506788 108
506794 108
506801 108
506806 108
506811 108
506820 108
506830 108
506832 108
506835 108
506838 113
506840 108
506844 108
506850 108
506857 108
506860 113
506863 108
506869 108
506875 108
506882 108
506888 108
506894 108
507001 111
507002 111
507003 111
507004 111
507005 111
507006 111
507007 111
507105 109
507190 09
507301 114
507302 114
507303 114
507304 114
507305 114
507307 114
507308 114
507959 114
52212024 .. 108
52212224 .. 108
52212524 .. 108
52212824 .. 108
526101 108
526106 108
526111 108
526130 108
526132 108
526135 108
526138 108
526140 108
526144 108
526150 108
526157 108
526163 108
526169 108
526175 108
526182 108
526188 108
526194 108
52930124 .. 111
529302 111
529311 111
52931160 .. 111
529811 111
532202 111
53220203 .. 125
532203 111
53220303 .. 125
532205 111
532211 111
53221460 .. 109
532218 111
53221860 .. 109
53230360 .. 109
532703 113
532716 113
532718 113
53300824 .. 111
53300924 .. 113
53301024 .. 111
533405 109
533408 109
540067 99
540068 99
540069 99
540070 99
540071 99
540072 99
540073 99
540074 99
540075 99
540076 99
540077 99
540078 99
540225 109
540321 109
540323 109
540324 109
540325 109
540327 109
541037 99
541039 99
541045 99
541076 99
541077 99
541079 99
541083 99
541084 99
541085 99
541087 99
541089 99
541093 99
541095 99
54120060 .. 100
54120080 .. 100
54120100 .. 100
54120130 .. 100
54120160 .. 100
54120190 .. 100
54120200 .. 100
54120220 .. 100
54120250 .. 100
54120280 .. 100
54120300 .. 100
54120320 .. 100
54120380 .. 100
541301 121
54130107 .. 124
54130109 .. 122
541372 109
541373 109
542301 103
542302 103
542303 103
542304 103
542305 103
542306 103
542307 103
542309 103
542311 103
542313 103
542315 103
542319 103
542320 103
542347 03
542351 103
542381 103
542501 103
542502 103
542503 03
542504 103
542506 103
542507 103
542508 103
542511 103
542513 103
542515 103
542519 103
542520 103
542538 103
542541 103
542701 103
542702 103
542703 103
542704 103
542705 103
542706 103
542707 103
542709 103
542711 103
542713 103
542715 103
542719 103
542720 103
542739 103
542740 103
542741 103
542801 103
542802 103
542803 103
542804 103
542807 103
542811 103
542812 103
542813 103
542815 103
542818 103
542819 103
542820 103
542822 103
542823 103
542881 103
54320042 .. 100
54320060 .. 100
54320080 .. 100
54320100 .. 100
54320130 .. 100
54320160 .. 100
54320190 .. 100
54320220 .. 100
54320250 .. 100
54320280 .. 100
54320300 .. 100
54320320 .. 100
544301 112
544302 112
544307 113
544361 113
544804 112
54520012 .. 100
54520019 .. 100
54520022 .. 100
54520026 .. 100
54520032 .. 100
54520042 .. 100
54520055 .. 100
54520060 .. 100
54520080 .. 100
54520100 .. 100
54520130 .. 100
54520160 .. 100
54520190 .. 100
54520220 .. 100
54520250 .. 100
54520280 .. 100
54520300 .. 100
54520320 .. 100
545303 113
545307 112
545311 112
545312 112
545320 112
545321 112
545322 112
545331 113
545338 112
546302 114
546304 114
546306 114
546314 114
546318 114
546906 114
546908 114
549101 109
549102 109
549103 109
549104 109
549105 109
549106 109
549107 109
549108 109
551801 112
551811 113
551812 113
552403 112
552404 112
552811 113
552816 113
553711 112
554903 112
559713 113
559802 103
559803 103
559804 103
559805 103
559806 103
559807 103
559810 103
560310 104
560315 104
560320 104
560325 104
560330 104
560510 104
560515 104
560520 104
560525 104
560530 104
560710 104
560715 104
560720 104
560725 104
560730 104
561304 104
562508 116
562510 116
562512 116
562515 116
562518 116
562522 116
562528 116
562535 116
563301 117
564101 112
564301 113
56422060 .. 101
56422080 .. 101
56506100 .. 101
56506130 .. 101
56506160 .. 101
56506200 .. 101
56506250 .. 101
56532100 .. 101
56532130 .. 101
56532160 .. 101
56532190 .. 101
56532210 .. 101
56532240 .. 101
56532250 .. 101
56532290 .. 101
56532320 .. 101
56534100 .. 101
56534130 .. 101
56534160 .. 101
56534190 .. 101
56534200 .. 101
56534210 .. 101
56534250 .. 101
56534290 .. 101
56534320 .. 101
56552100 .. 101
56552130 .. 101
56552160 .. 101
56552190 .. 101
56552250 .. 101
56554160 .. 101
56554190 .. 101
56554200 .. 101
56554250 .. 101
56554290 .. 101
56554320 .. 101
56573080 .. 101
56573100 .. 101
56573130 .. 101
56573160 .. 101
56574250 .. 101
566601 115
566602 115
566603 115
566701 115
566702 115
566703 115
567201 115
567601 115
567603 115
567671 115
567701 115
567703 115
567731 115
567771 115
568802 115
568805 115
568806 115
570907 117
570910 117
599921 113
599931 113
599962 113
599991 113
60000083 .. 133
60000084 .. 133
60113110 .. 133
60123110 .. 133
60133110 .. 133
60143110 .. 133
60153110 .. 133
60214110 .. 133
60224110 .. 133
60234110 .. 133
60244110 .. 133
60245110 .. 133
60314110 .. 133
60324110 .. 133
60334110 .. 133
60344110 .. 133
60354110 .. 133
60414110 .. 133
60418110 .. 133
60424110 .. 133
60428110 .. 133
60434110 .. 133
60438110 .. 133
60444110 .. 133
60448110 .. 133
60454110 .. 133
60458110 .. 133
60515110 .. 133
60518110 .. 133
60525110 .. 133
60528110 .. 133
60535110 .. 133
60538110 .. 133
60545110 .. 133
60548110 .. 133
60555110 .. 133
60558110 .. 133
60618110 .. 133
60628110 .. 133
60638110 .. 133
60648110 .. 133
60658110 .. 133

In the course of further technical developments, the right is reserved to change the construction and appearance of the brushes without prior notice. Indications of size are approximate and without obligation or recourse to third parties.

Bold printed item numbers
are always on stock.
Italic printed articles
as well as special brushes will be produced for you with a short delivery time.
Please also see our terms on page 139.

EAN
All packaging units are marked with an EAN Code. This symbol shows, which articles are marked with an EAN Code in particular.

Keyword Index

Article Page

Accessoires Wheel Brushes ..... 38 - 39
Adapter Sets ..... 38 - 39
Adapter Threads 39, 115
Band Saw Brushes ..... 34 - 35
Battery Terminal Brushes 117
Bevel Brushes ..... 58 - 59
Blister packaging 122
Boiler Brushes ..... 110 - 112
Boiler Brushes-Sets 113
Bore Hole Cleaning Brushes 105
Brake Caliper Bruhes ROKI 82
Bricklayer's Brushes 89
Brooms ..... 90 - 91
Brushes for grass trimmers ..... 60 - 61
Brushes for wood working ..... 34 - 35
Brushes removing wet storage stain 87
Brushes with carbon fibre ..... 130 - 131
Chimney Brushes ..... 110 - 111
Cup and Bevel Brushes ..... 50 - 61
Cup Brushes, abrasive filament 56
Cup Brushes, brass coated steel wire 56
Cup Brushes, crimped wire 56
Cup Brushes, knotted ..... 52 - 55
Cup Brushes with Shank ..... 68 - 69
Cup Brushes, straight filament 57
Cut Cases 123

Article Page

Cylinder Brushes ..... 102 - 104
Deburring Brushes ..... 40 - 49
Deburring End Brushes ..... 48 - 49
Deburring Wheel Brushes ..... 42 - 45
Disc Brushes ..... 135 - 137
Displaybox 124
DIY Brushes ..... 118 - 127
DIY Brush Sortiments ..... 120 - 125
Drive Arbors ..... 38 - 39
Dusters ..... 92 - 93
End Brushes, knotted ..... 74 - 75
End Brushes with Shank ..... 70 - 73
File Cards 89
File Cleaners 89
Fine Scratch Brushes 85
Fitting Brushes 116
Gas Cooker Brushes 85
Hand Brushes and Brooms ..... 78 - 95
Hand Brushes Export Model 83
Hand Brushes Heavy Duty 83
Hand Brushes Rectangular and Violin 87
Hand Brushes Standard ..... 80 - 81
Hand Brushes with Plastic Handle 82
Hand Brushes with Scraper 83
Hand Brushes with Strap 87
Hand Brushes with Two-Components

Article Page

Handles 82
Handles and Extensions 115
Hanger assembly for tube brushes 125
HFB ..... 132 - 133
Hole Cleaning Brushes 104
Industrial Brushes ..... 128 - 143
Interior Brushes ..... 96 - 117
Joint Cleaning Brushes 19
Knotted Wheel Brushes ..... 16 - 18
Lath Brushes ..... 138 - 139
Metal Discs Spare Parts ..... 38 - 39
Mikroabrasive Interior Brushes ..... 98 - 100
Mikro Interior Brushes 101
Miniature Brushes ..... 76 - 77
Packaging and Presentation ..... 122 - 125
Pipeline Brushes ..... 20 - 23
Plasterer's Brushes 89
Radiator Brushes 88
Rivet Brushes 83
Roller Brushes ..... 46 - 47
Rust Scratcher 117
Satin Brushes ..... 32 - 33
Scratchers 117
Scrubs ..... 90 - 91
Shank Brushes ..... 62 - 77
Single Segment Brushes ..... 24 - 27

Article Page

Sleeve Brushes 109
Small Diameter crimped Wheels 37
Soldering Fluid Brushes 117
Soluble Oil Brushes 117
Spark Plug Brushes 84
Special Hand Brushes ..... 86 - 89
Special Wheel Brushes ..... 34 - 35
Spiked Rollers 89
Staining Brushes 88
Stove Pipe Brushes 114
Strip Brushes ..... 142 - 143
Stripping Brushes ..... 34 - 35
Structuring Brushes 64, 66
Tube Brushes ..... 106 - 109
Universal Wire Brushes 83
Wheel Brushes ..... 14 - 39
Wheel Brushes for the treatment
of hard metal 37
Wheel Brushes with Shank ..... 64 - 67
Wheel Brushes with Thread ..... 58 - 59
Weed Brooms ..... 94 - 95
Weed Brushes ..... 94 - 95
Wide Face Brushes ..... 140 - 141

General Conditions of Sale and Delivery

Dear customer, you can find the full version of our general conditions under www.lessmann.com
The most important conditions are:

1. Scope
Our general conditions of sale apply exclusively; we do not acknowledge any conditions of the customer which are contrary to or deviate from our general conditions of sale, unless we explicitly consented in writing to their validity. All agreements reached between us and the customer for the purpose of carrying out this contract must be made in writing. This applies also to offers and orders which were agreed with our sales representatives. Our general conditions of sale shall apply only to commercial businesses, not to private consumers.

2. Offer
All prices contained in an offer are subject to alterations. The prices are valid as fixed prices for 6 months, only after acknowledgement of the order. We reserve rights of ownership and copyrights on diagrams, drawings, design worksheets and other documents; they must not be made accessible to third parties.

3. Prices – Terms of Payment
All prices are in € (EURO), ex works Oettingen, exclusive costs of packaging. Our prices do not include Value-Added Tax. Unless stated otherwise in the acknowledgement of the order we grant 2% cash discount on payments in cash made within 10 days after the date of the invoice, payments shall be made within 30 days from the date of the invoice. In case of a delayed payment, we are entitled to demand interest at a rate of 4% p.a. above the actual basis rate of the EZB.

6. Reservation of Ownership
The customer shall obtain ownership of the delivered products only after we have received all payments from the business relationship with the customer. In the event of seizures or other actions by third parties, the customer shall inform us thereof immediately in writing. As far as the third party is not able to reimburse our total costs of legal action in accordance with paragraph 771 of the German Code of Civil Procedure, the customer shall reimburse us the loss. The customer is entitled to sell the products. The customer shall assign all rights and titles arising from the further sale to us regardless of wheth er the products have been processed or not. The customer remains entitled to collect the payments from the sales. We shall not collect any payments except the customer is behind with payments and/or has gone bankrupt and/or has stopped payments. Any processing, marking or other changes of the products by the customer shall be done on our behalf. If we have to take back the products, the customer shall give us the name and address of the customer who wished the products to be processed, marked or changed. We shall, at the request of customer, release our rights and titles up to the amount which exceeds 20% of the value of our payment claim to be protected. The selection of the rights and titles to be released shall be at our discretion.

7. Place of Jurisdiction – Place of Performance – Law
Place of jurisdiction shall be the place of our office. We also may take proceedings against the customer at the place of its office. Our office is the place of performance, unless our acknowledgement of the order stated something different. The laws of the Federal Republic of Germany shall apply. The United Nations Convention on Contracts for the International Sale of Goods (CISG) shall not apply.

8. Miscellaneous
Special designs can not be taken back. Our deliveries may deviate from the agreed volume by +/- 15%.
The minimum order value, as well as extra payments for small volume purchases, are fixed in the actual price list. Quantities deviating from the standard packet will be increased or decreased to the corresponding standard packet, otherwise extra payments per incomplete packet will be charged in accordance with the actual price list.
Minimum order value:
For stock articles (**bold printed** articles):
net € 100,00
For special production and *italic printed* articles:
net € 250,00 / article
Extra payment for incomplete packets:
net € 3,00

Express delivery on extra charge available.

We reserve the right to change the construction and design of the brushes in the course of further technical developments. Information to measurements are approximate and not binding. All measurements are in mm.

The LESSMANN free dimension tolerances apply. Request these if necessary.

Notes

More information...

... found on our homepage!
www.lessmann.com

Beside the variety of languages (german, english, spanish, czech, turkish and russian) we also provide you with useful information.

For example you can download:
- the complete article-number-catalogue-side-index
- enquiry forms of the different special brushes
- notes regarding the filling materials e. g. tables of the chemical and physical characteristics
- our brochure "Brush-Know-How"
- safety and operating instructions
- ISO 9001 certificate
- general terms and conditions

Please also ask for our special leaflets:
- Deburring with Brushes
  Art. No. 99EGBENG
- Interior Brushes / Miniature Brushes
  Art. No. 99INBENG
- Disc Brushes
  Art. No. 99TBDEUENG
- Brush Know How
  Technical Advice
  Art. No. 99BKHENG

THE GERMAN BRUSH COMPANY

LESSMANN®

www.lessmann.com

LESSMANN®

More than 10.000 solutions ...

As a constantly developing and producing specialist we are able to produce special brush models in both small and large series production runs. This is brought about by our own engineering, tool, and equipment building department in association with our modern machine facilities.

LESSMANN®

THE GERMAN BRUSH COMPANY

Lessmann GmbH
Lucas-Schultes-Str. 2
86732 Oettingen
Germany

Tel.: +49 9082 707-0
Fax: +49 9082 707-78

www.lessmann.com
info@lessmann.com

USA:
Lessmann Inc.
P.O. Box 890125
Houston, TX 77289

www.lessmann-inc.com

Accredited with DIN EN ISO 9001:2008

QUALITY MADE IN GERMANY